2018 BEST Robotics Competition Rules

22 August 2018

Quick Links

General Rules	Game Specific Rules	Judged Categories
Consumable Kit	CURRENT EVENTS	Judged Components
Returnable Kit	Scoring Summary	Awards
Team Custom Parts		Advancement

Table of Contents

Section 1 **General Rules**

1.1 Overview

This is a student-oriented contest. The students will gain the most if they do the work. Mentors and coaches are to provide guidance only and not to make parts, detail design, nor force their will on the students.

The rules governing the BEST competition consist of the following:

1. Section 1 BEST General Rules
2. Section 2 Paragraph 2.1 Returnable Kit List
3. Section 2 Paragraph 2.2 Consumable Kit List
4. Section 3 Game Specific Rules (may supersede Generic Rules)
5. On-line Question and Answer (Q&A) system

Most questions about the game can be answered by first READING THE RULES THOROUGHLY. All questions concerning these rules (during the 6-week design and construction phase, not during the competition) must be submitted to the Game Committee in writing through the web-based interface at **http://www.bestinc.org**. All questions and answers will be distributed to all teams via the web. Responses to the posted questions on the web site are an extension of the rules. In the event of contradiction between the rules and the Q&A responses, the Q&A responses supersede the rules.

1.2 Safety

Safety may not and will not be compromised.

1. Safety is a priority.

2. The referees will disqualify any machine that appears to be a safety hazard.

3. Batteries, chargers, and other components of the BEST Control System Kit may not be tampered with or altered in any way.

4. Except for a power drill/driver and a soldering iron/gun (electrically powered only), no power tools (including battery operated) will be allowed in the pit area during any BEST activity. Common hand tools will be allowed. The power drill/driver may be used for drilling and/or hardware insertion/removal, but not for grinding, sawing, routing, etc. The allowed power tools can only be operated only in the pit area or in the hub designated workstation area.

5. All individuals working on the machine in the pit area must wear safety gear appropriate to the activity (e.g., safety glasses should be used when soldering or drilling).

6. Any illegal tools may be confiscated for the day.

1.3 Robot Design Constraints

1.3.1 Material Constraints

Each team receives two kits: a Returnable Kit and a Consumable Kit. Each machine must be constructed using only the materials that appear on the returnable and consumable kit lists (provided in Section 2). Exceptions to this rule are described in Section 1.3.1.4 .

The Returnable Kit List and Consumable Kit List are the official references for parts; therefore, they define the type and quantity of parts that can legally be used on the machine. The team is responsible for confirming that items in the received kits are consistent with the items on the lists and include no excess parts. Excess parts may not be used.

1.3.1.1 Construction Requirements

1. All robot construction is to occur after the hub Game Kickoff event has been held. There should be no part construction prior to the Game Kickoff event nor reuse of parts from previous competitions. Robot parts may be permanently marked (via scribing, drilling holes, etc.) by BEST personnel in order to prevent reuse.

2. There are no restrictions on the tools or machines that are used to create parts; however, there is still the expectation that students will be taught how to use these tools/machines and that they will be the ones using and operating them in the fabrication of the parts.

3. The VEX Cortex microcontroller and battery must be secured to the robot. The Cortex microcontroller must be mounted to your robot through the holes provided on its base (suggest using #8 machine screws to avoid damaging the Cortex).

1.3.1.2 Returnable Kit

1. All Returnable Kit items, including boxes and packing, **must be returned** at the conclusion of the contest in the same condition as received except as noted in item 2 below.

2. Returnable Kit equipment cannot be modified in any way, with the following exceptions:

    a. The belt stock supplied in the returnable kit may be modified as needed (e.g., cut, holes punched, etc.); however, the belt that is provided as loop may not be modified.

    b. Servo horns may be modified as desired.

3. The Returnable Kit List specifies certain items that may not be attached to the machine (e.g., the battery chargers).

4. The motors and servos may not be opened for any reason. For example, it is illegal to change the gearing or to re-wind the armature of any motors.

5. The pulleys, bearings, and shoulder screw included in the return kit may not be modified. You may not use any glue or adhesive tape on these items.

6. Tape/adhesive/glue may not be applied to any returnable item unless specifically allowed (see Section 1.3.1.4 item 11). The adhesive portion of the supplied Velcro™ brand hook and loop fastener may not be attached to the battery or to any other returnable item.

7. Paint may not be applied to any Returnable Kit item.

8. The VEXnet Joystick, servos, VEX Cortex microcontroller, VEXnet Keys, batteries, and battery chargers may not be tampered with, modified, or adjusted in any way. The only exception is that the VEX Cortex microcontroller may be programmed as desired.

9. Teams may not put labels or rubber bands on the VEXnet Joystick, nor make internal, reversible modifications to the joysticks.

10. Wires may be soldered to the motor power lugs.

11. Only the motor controllers or the servo power adapter cables may be plugged directly into the VEX Cortex microcontroller motor ports. Motor ports 1 and 10 cannot be used (do not plug the screw terminal motor interface cables into these ports). Only the screw terminal sensor interface cables (3-wire) may be plugged directly into the VEX Cortex microcontroller digital/analog input/output ports. No other connection methods to the Cortex may be used. Soldering to the Cortex microcontroller or to any of the interfacing cables is not allowed.

12. The BEST-supplied 7.2 Volt NiMH 3000maH batteries are the only allowed source of electrical power for the functional components of your entire machine.

13. The 7.2 Volt batteries may **only** be connected to the VEX Cortex microcontroller through the supplied mating connectors. Do not attempt to connect the 7.2 Volt batteries to any other Cortex input other than the battery connector.

14. Only one 7.2 Volt battery may be used on the machine during a match. Even if unconnected, the other battery may not be on the machine.

15. On Game Day, replacement batteries will only be provided upon proof of battery failure (e.g., a bad connection) on an exchange basis (you must turn in the bad battery).

16. You must play all your Game Day matches using the 7.2 Volt batteries supplied by BEST. Team-owned batteries (that power the robot) and team-owned battery chargers for the 7.2V batteries are not allowed on the field or in the pit area on Game Day; however, team-owned batteries are allowed during other BEST activities.

17. You may use the provided AAA rechargeable batteries or team provided batteries in the VEX Joystick.

1.3.1.3 Consumable Kit

1. Consumable Kit parts may be modified as desired within the constraints of these rules.

2. Limited numbers of replacement parts may be available from your local hub, upon a justified request. Otherwise, lost or damaged kit material may only be replaced with identical components. Replacement parts purchased by the team must have the same:

    a. material as the kit part;

    b. treatment or grade as the kit part; and;

    c. dimensions as the kit part.

    e.g. a 1x4 may **not** be replaced with a 2x4 of the same total volume.

3. The Consumable Kit includes optional items that may be provided by the team and used on the machine.

4. Team supplied pennies may not be altered.

5. The only Consumable Kit items that may be used to conduct electricity are the provided wire, the snap-plug terminals or the (optional) quick-disconnect terminals (and also soldering material at the wiring connections). The only exception is that any of the Consumable Kit provided/allowed metallic materials may be use as part of a sensor circuit.

6. No package materials may be used (materials that come with kit items to protect or store them before use). Examples: The plastic film that covers the adhesive portion on the hook and loop strip; cardboard roll at the center of a tape roll.

1.3.1.4 Additional Materials, Constraints and Exceptions

1. Lubricants may be used for lubrication only. A machine may not intentionally contaminate the playing field or an opponent's machine with lubricant.

2. Paint, stickers, and/or decals may be used on the robot as decorations only. They cannot be applied to any of the returnable items. Paint or finish cannot be used to change the mechanical properties of what it is applied to. The colors of paint/finish that are used on the machine are not considered in a functionality determination. For example, some item on the machine could be painted neon orange to increase its visibility.

3. Other non-functional decorations are only permitted if they do not aid the machine in performing the game. If you can remove it or cover it up (and you may be asked to) and your machine behaves the same, it is probably non-functional. Lights can be added to the machine, but no strobe lights are allowed.

4. Video capture devices (like a GoPro or a phone) are allowed on the robot subject to the rules for decorations and with the additional rules listed below:

    a. display screen cannot exceed 6” diagonal

    b. display must be turned off or covered up

    c. non-BEST kit mounting brackets/hardware are considered to be part of the device

d. recommend that device be protected from possible contact with field or other robots (BEST not responsible for any damage that occurs to the device during game play)

e. device cannot be transmitting a signal (no streaming)

f. BEST officials may ask for the device to be removed at any time for any reason

5. Non-functional decorations may use a separate power source (e.g., 9V battery).

6. The use of markers/paint/printouts may be used to provide visual information that does not aid the team in performing the game. Examples of what is allowed would be things such as labeling machine parts with a marker, placing a copy of the Cortex port use schematic on the machine, and so on.

7. You may solder electrical wire connections using your own solder except where electrical connectors are provided. Where connectors have been provided (i.e., on the VEX Cortex microcontroller, servo power adapter cables, servo extension wires, batteries and other returnable items), they must be used without soldering to the connector. Solder may be applied to connectors included in the Consumable Kit (e.g., bullet connectors or quick-disconnect connectors).

8. No welding, brazing or structural soldering is allowed.

9. Metal, rubber, and plastic items may be heated and reformed, but may not be melted and re-cast.

10. Materials may not be changed chemically. The exceptions are that strings and the outer sheath of the shock cord may be singed to prevent loose ends and that kit allowed resin and hardener may be mixed to result in epoxy.

11. Residue-free “painters” tape (supplied in the Consumable Kit) may be used on any Returnable Kit items except the Joystick.

12. Thread locker may be used on Consumable Kit fasteners.

1.3.1.5 Team Custom Parts

Two Team Custom Parts (TCP) are allowed.

1. Each part can be made from any uniform (homogeneous) team supplied material.

2. Each part must be able to fit, unconstrained, into a 2” x 4” x 4” cuboid.

3. Each part must be a single continuous piece of material (when in its operational state).

4. The basic raw stock form of the chosen material must be used for the part. The starting raw stock must be rectangular or cylindrical material if the final part retains any of the original raw stock shape. Material starting shape is irrelevant for parts that are in a liquid state in the forming process or if the final part is completely carved/machined from a solid block of the material.

5. No other kit parts may be embedded in a TCP.

6. No hazardous materials are allowed (rule 1.2 item 2 still applies).

7. No welding is allowed (rule 1.3.1.4 item 8 still applies).

8. Melting is allowed (rule 1.3.1.4 item 9 is waived).

9. Chemical change is allowed (rule 1.3.1.4 item 10 is waived).

1.3.2 Size

1. At the start of each match, the machine must fit, **unconstrained**, within a cubic space that is 24 inches on a side (machine can be powered on during this check). The machine must remain within the maximum size limit, unconstrained, until the beginning of the match.

2. Once the match begins, the machine may unfold and change size through its own power.

3. There is no size requirement at the end of the match (i.e., the machine does not have to return to its initial configuration).

1.3.3 Weight

1. The weight of the machine may not exceed 24 pounds, including the battery and all parts and devices of your machine (e.g., detaching pieces, optional equipment, tethered parts, decorative items, etc.).

1.3.4 Energy Sources

1. The energy used by the machine must come solely from:

    a. electrical energy derived from the single onboard battery pack;

    b. storage achieved by the deformation of the springs provided in the kit or springs created per the Team Custom Part rules;

    c. a change in the altitude of the center of gravity of any part of the machine; and/or;

    d. stretched items (inner tube/rubber bands/shock cord/TCP) are allowed provided that the part is attached to the machine so that it will not fly off if broken

1.3.5 Compliance

1. All machines will be inspected for compliance with the regulations before the competition. Machines must meet these regulations to qualify for the competition. The winning machines may be inspected again following the competition. Failure to comply with the regulations will result in disqualification.

2. No substitute machines are allowed. Machines may be modified between rounds but must still meet all the regulations after the modifications are made. The compliance official must approve all modifications prior to the next round of competition.

3. Random re-checks of machines will be performed throughout the day at the discretion of the referees. Any machine found to be non-compliant will not be allowed to continue the competition until brought into compliance and may be disqualified from prior matches.

4. The machines may not leave the competition site between the time they are checked for compliance and the start of the competition without approval from the competition officials.

5. Teams that place high enough to advance to a regional/national competition are allowed to make repairs and/or functional improvements to their machine. Machines will be rechecked for compliance prior to the regional/national competition.

6. A machine may have multiple configurations, like different arms that can be swapped-out. Each configuration must meet size and weight requirements independently and be approved through a compliance check. The sum total of all parts and materials from all of the configurations cannot exceed the quantities defined by the Returnable and Consumable Kit Lists.

1.3.6 General

1. Machines must be designed to operate by reacting only against the surfaces of the playing field (including the PVC pipes, ramps, etc), the opponents' machines, and the air. Machines are allowed to clamp to anything in the field except another machine.

2. During a match, the machine may only be controlled through normal operation of the VEXnet system. Touching the robot will result in penalty or disqualification as described in section 1.4.4.

3. No external devices may be connected to the joystick during match play unless specifically provided by BEST competition personnel (things such as an auxiliary power supply or a channel shifting dongle).

4. Machines must prominently display their team number.

5. Powered tandem devices are permitted and may use an umbilical to connect the two devices. This umbilical is considered part of the machine and is subject to the same constraints as the rest of the machine.

6. All projectiles must have a frontal area greater than 10 square inches. A projectile is anything launched through the air, whether free flying or tethered. Parts that detach or fall from a machine and remain on the playing surface are not considered projectiles.

7. Gaining traction or gripping game pieces by the use of adhesives, or by abrading or breaking the surface of the field is not allowed. The friction tape (either side) from the Consumable Kit is not considered an adhesive and is allowed (actually intended) for gripping.

8. Spiked wheels are allowed only if the portion of the spike in contact with the field has at least one dimension greater than ¼ inch.

9. Strategies aimed only at destruction, damage (e.g., stabbing, cutting, etc.), over-turning, or entanglement of an opponent's machine are not in the spirit of the competition and are not allowed. Turning over an opponent's machine may or may not result in a penalty depending on the opinion of the referees. Review section 1.4.4 for a description of penalties for overly aggressive actions.

10. Machines may deploy detachable components on the field. A component is considered "detached" if it has no kit parts connecting it, directly or indirectly, to the set of kit parts that includes the battery. Such components may be used to capture, contain, manipulate game pieces, and/or block another machine. Such components may not be launched at, deliberately attached to, or otherwise deliberately used to entangle another machine. Incidental contact between any machine and such detachable components after deployment will not result in a penalty for any team. Detached components will not count as "part of the machine" unless otherwise stated.

11. Following the contest, all items provided in the Returnable Kit must be returned to the hub (local BEST organization). The rest of the machine may be retained by its respective school.

1.4 Head-to-Head Competition Rules

1.4.1 General

1. Referees have ultimate authority during the competition. No protests will be allowed.

2. On Game Day there will be individuals identified to answer questions about the game or rules. Do not approach referees (or others) with questions.

3. A referee, at their discretion, may untangle machines that become entangled with part of the field, or each other, for more than 10 seconds or that may appear to be damaging the field because of the entanglement. A machine that is high-centered on an element of the field or on a game piece is not considered entangled. A machine that has tipped over is not considered entangled. A referee may ask the driver to quit attempting to free their machine if the field is at risk of being damaged.

1.4.2 Field Colors

Specific team locations on the field (e.g., driver/spotter locations, robot starting area, allowed team maneuvering areas, team scoring areas, etc.) are designated through the following four-color scheme.

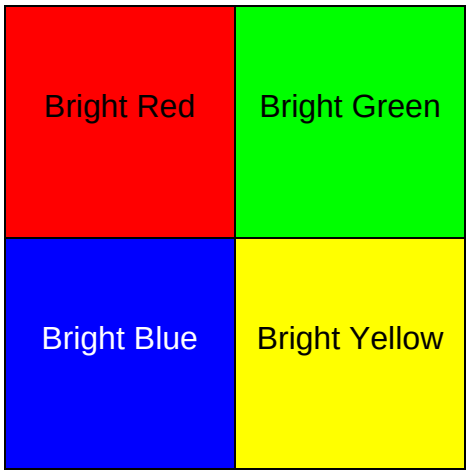

1.4.3 Drivers and Spotters

1. During a match, only one student member of each team is allowed in the team driver's area and one student member is allowed in the team spotter's area. Adult coaches and teachers are not allowed in either of the areas during matches. Students are not allowed to stand on platforms of their own construction (or each other) to get a better view. A hub may, on a case-by-case basis, make unique provisions for special needs drivers/spotters as deemed appropriate.

2. Only one person per match is allowed to drive the machine (i.e., operate the VEXnet Joystick). Prior to the competition, each team must submit a driver list to the organizers. The minimum number of student team members on the driver list is shown in the following table:

Student team members **present** at competition	**Minimum** number of students on driver roster
2-4	2
5-6	3
7-8	4
9 or more	5

Please note that the previous table reflects the minimum number of drivers required; BEST encourages participation by as many team members as possible. Also note that the

number of student team members present at the competition is used to determine the minimum number of drivers on the list.

3. The first person on the driver list is the driver for the first match; the second person on the list is the driver for the second match, etc. This rotation will continue for successive matches until the list is exhausted, at which time the rotation will start again at the top of the list. Rotation in successive phases of the competition (e.g., seeding, semi-finals, and finals) will begin where the previous phase rotation left off. If the organizers eliminate a match for any reason, the driver rotation will continue in accordance with the driver list with the driver scheduled for the eliminated match (or matches) being the first driver for the following match.

4. The spotter may be any student from the team.

5. Spotters and drivers are not allowed to handle the game pieces prior to a match.

6. During a match, spotters and drivers may not communicate with anyone through the use of any electronic devices or other signaling technique that involves a signaling aid that is not part of the human body (e.g., signs, sticks, marked gloves, etc. are not allowed).

1.4.4 Penalties

1. A 20-second suspension may be assessed for a variety of infractions that are detailed elsewhere in this document. This penalty requires the driver to surrender their VEXnet Joystick to a referee for a period of 20 seconds. The referee will return the joystick to the driver upon expiration of the penalty and the machine may continue the match. Penalty decisions of the referees will be final.

2. If a driver touches their own machine before any part of it has left the starting area, a 20-second penalty will be assessed after contact ceases. Machine contact within the starting area is allowed only for the purpose of debugging a defective machine (e.g., turning on the on/off switch). If a spotter or driver otherwise touches their own or another team's machine, the machine of the individual doing the touching will be disqualified.

3. Spotters and drivers are not allowed to enter the field during a match. If a spotter or driver enters the field during a match, their machine will be disqualified.

4. If a spotter or driver leaves the designated spotter or driver area, a 20-second penalty will be assessed as described in <u>item 1</u> of this section.

5. Machines that touch the ground outside the field boundary will be assessed a 20- second penalty as described in <u>item 1</u> of this section. Machines that completely leave the field will be stopped for the duration of the match.

6. Damaging any portion of the field or game pieces may result in disqualification. Intentionally moving or tipping over static portions of the field is considered damaging the field, and will result in disqualification.

7. Referees may instruct the driver of an aggressive machine to cease an action if the referee feels that another machine or the field may be damaged by that action. Referees will disqualify a team from a match if a major breach of the rules occurs.

8. Disqualification is on a match basis, except for non-complaint machines as noted in Section 1.3.5. Any team that is disqualified will receive zero points for that match.

1.4.5 Match Protocol

1. There will be at least five referees during each match. The Head Referee will act as timekeeper and the other four referees will monitor each of the teams.

2. Each match will be three minutes long and will be played with four teams, if possible. The scoring software will assign teams to a match and will determine the team's quadrant/color for each match.

3. Teams will be notified of their field and position assignment at least two minutes before the match. Teams must be in the staging area at the end of the preceding match.

4. Prior to the beginning of the match, teams must wait at the designated staging area until the beginning of the setup period. Once signaled, teams have the duration of the setup period to place their robot into a valid starting position. Refer to Section 3 Game Specific Rules to clarify valid starting positions.

5. As a guide, a maximum setup time of 30 seconds will be allowed once the team arrives at the field. If a team has not successfully placed their robot by the end of the setup period, the head referee has discretion to allow the team to continue to place their robot and assess a 20-second penalty to be applied at the beginning of the match or whenever the team is ready to begin play.

6. At the start of each match, the machine must be placed at the designated starting area. The spotter or driver may enter the field prior to the start of the match to place the machine in its starting location and prepare it for the match. Temporary alignment marks on the field are not permitted. Additional team members may be allowed to assist in setting up the machine, but must leave the field area prior to the start of the match.

7. The machine, driver and spotter must be in the designated location(s) at the start of the match to score any points during the match. The driver and spotter must remain in the designated areas during the match.

8. A maximum of 30 seconds will be allowed at the end of each match for removal of the machines. Additional team members may be allowed to assist in removing the machine.

9. At the end of the match, the driver and spotter must remain in the designated areas until referees have complete scoring of the match and indicated that robots may be removed.

10. Following the match, the referee will review the scored items with the driver; the driver will sign the scorecard indicating agreement.

1.4.6 Competition Protocol

There will be four phases to the head-to-head competition:

- a seeding phase,
- a wildcard phase,
- a semi-final phase, and
- a finals phase.

This protocol will be the same for both hub contests and regional contests.

Section 3 Game Specific Rules define any tiebreakers for determining which team advances from one phase to another in the event of a tie.

1.4.6.1 Seeding Phase

The Seeding Phase will consist of a round robin competition among all participating teams. Each team will typically participate in up to eight matches against randomly selected opponents. Fewer than eight matches per team may be played when time limitations exist, but no fewer than five matches. All teams will participate in the same number of matches. Match scheduling will attempt to ensure that each team plays on each quadrant of the field and that back-to-back matches are limited.

The team ranking during this phase will be based on the average of the points scored during the seeding matches excluding the teams' lowest match score. Consult Section 3 Game Specific Rules for any variation to this ranking method.

For competitions with 32 or fewer teams, the top 7 teams from the seeding phase will automatically advance to the semi-finals phase. The final team to advance into the semi-finals phase will be selected from the remaining teams during the "Wildcard Match Phase".

For competitions with greater than 32 teams, the top 14 teams from the seeding phase will automatically advance to the semi-finals phase. The final two teams to advance into the semi-finals phase will be selected from the remaining teams during the "Wildcard Match Phase".

1.4.6.2 Wildcard Match Phase

For competitions with 32 or fewer teams, the wildcard phase will consist of a single match between the four (4) teams with the highest BEST Engineering Notebook scores, who have not automatically advanced to the semi-final phase. The team achieving the highest score during the wildcard phase will advance to the semi-finals.

For competitions with greater than 32 teams, the wildcard phase will consist of two matches between the eight (8) teams with the highest BEST Engineering Notebook scores who have not automatically advanced to the semi-final phase. This phase will consist of 2 matches of 4 teams (as all matches are limited to 4 teams), which may be played in parallel. The two (2) teams achieving the highest scores during the wildcard phase will advance to the semi-finals.

The wildcard phase will be conducted according to the rules for the seeding phase. Each wildcard team will play in only one match during this phase.

1.4.6.3 Semi-Finals Phase

During the semi-finals phase, each team will participate in three (3) matches based on the rotation shown in Table 1 or 2. The team ranking at the end of the semi-finals will be based on the total points each team accumulated during their three matches. No scores will be dropped and the scores from all previous phases will be disregarded. Game play will be the same as previously described for the seeding phase. Only the top four (4) ranked teams from the semi-finals phase will advance to the finals, regardless of the number of teams competing in the semi-finals.

Table 1. Field Position Assignments for 8-team Semi-Finals

Semi-Final Match	Field Position Assignment			
	Yellow	Blue	Red	Green
1	Seed 4	Seed 1	Seed 5	Seed 8
2	Seed 2	Seed 8	Seed 3	Seed 7
3	Seed 6	Seed 4	Seed 7	Seed 1
4	Seed 3	Seed 2	Seed 4	Seed 5
5	Seed 5	Seed 7	Seed 8	Seed 6
6	Seed 1	Seed 3	Seed 6	Seed 2

Table 2. Field Position Assignments for 16-team Semi-Finals

Semi-Final Match	Field Position Assignment			
	Yellow	Blue	Red	Green
1	Seed 4	Seed 13	Seed 5	Seed 16
2	Seed 2	Seed 10	Seed 3	Seed 15
3	Seed 5	Seed 9	Seed 8	Seed 14
4	Seed 16	Seed 1	Seed 6	Seed 11
5	Seed 8	Seed 4	Seed 2	Seed 12
6	Seed 7	Seed 11	Seed 9	Seed 10
7	Seed 3	Seed 14	Seed 13	Seed 6
8	Seed 10	Seed 12	Seed 1	Seed 5
9	Seed 14	Seed 2	Seed 16	Seed 7
10	Seed 11	Seed 8	Seed 15	Seed 13
11	Seed 1	Seed 7	Seed 4	Seed 3
12	Seed 6	Seed 15	Seed 12	Seed 9

1.4.6.4 Finals Phase

The four (4) top ranked teams will participate in three (3) matches during the finals phase. Field assignments per match will rotate as shown in Table 3. The final team ranking will be based on the total points accumulated by the team during these 3 finals matches. No scores will be dropped and the scores from all previous phases will be disregarded. Game play is the same as

previously described for the seeding phase. The winner is the team with the most points accumulated during the three final matches.

Table 3. Field Position Assignments for Finals

Final Production Match	Field Position Assignment			
	Yellow	**Blue**	**Red**	**Green**
1	Semi-Final 1	Semi-Final 2	Semi-Final 3	Semi-Final 4
2	Semi-Final 4	Semi-Final 3	Semi-Final 2	Semi-Final 1
3	Semi-Final 3	Semi-Final 1	Semi-Final 4	Semi-Final 2

1.5 Other Rules

1. Student eligibility is left to each individual school.

2. All contestants on the gym floor must wear shoes appropriate to the gym floor surface as determined by the sponsoring BEST organization.

3. Each team will be provided with their own workspace in the pit area in which they may place a table with a surface area no greater than 2400 square inches, if a table is not provided by the hub. Each team will have access to one electrical plug for battery charging. The exact specifications may vary from hub to hub.

4. Each team may bring a toolbox with basic hand-tools subject to the safety constraints listed in Section 1.2 . If a part is broken during competition and the team cannot repair it with tools or material they have, consult the sponsoring BEST organization. They will make their best effort to help the team replace the part, given local shop and/or spare material availability.

5. Practice time may be available preceding Game Day. Consult the sponsoring BEST organization for times and locations. Tables and electricity will be available on a shared basis and teams must provide their own tools. The same safety rules will apply to practice days as they do during the competition.

Section 2 **Official Kit Contents**

The official BEST Kit Lists are shown on the following pages. Refer to section 1.3.1 for details regarding Kit constraints and usage. Each machine must be constructed using only the materials (quantity, type and grade) that are on the returnable and consumable kit lists. The ONLY exceptions are described in Section 1.3.1.4 .

2.1 Returnables Kit

2018 BEST Returnable Kit List

	Check	Qty	Item Description	Required/Optional	Source	Part Number
BEST Control System Kit (VEX 270-1605)		1	Cortex Microcontroller	Req'd[3]	VEX Robotics	278-2194
		1	VEXnet Joystick	Req'd	VEX Robotics	276-2192
		2	VEXnet Key 2.0	Req'd	VEX Robotics	276-3245
		4	Motor Controller 7.2V 4A	Req'd	VEX Robotics	276-2193
		2	Large Motor	Req'd	VEX Robotics	276-1611
		2	Small Motor	Req'd	VEX Robotics	276-1610
		2	7.2 V 3000 mAhr NiMH battery - modified w/ PowerPoles	Req'd[1]	VEX Robotics	276-1491
		2	Charger Adapter (for Cortex and Battery Charger)	Req'd[2,3]	None - Hub Assy Reqd	n/a
		8	Screw Terminal Sensor Interface Cable 3-wire	Req'd[4]	VEX Robotics	276-3071
		4	Screw Terminal Motor Interface Cable (red and black wires)	Req'd	VEX Robotics	276-1608
		4	Servo Power Adapter Cable	Req'd	VEX Robotics	276-2195
		1	Smart Battery Charger & power cord	Req'd[2,3]	VEX Robotics/Other	276-2519, 276-2520
		1	8-bay AAA Smart Battery Charger & power cord	Req'd[2]	VEX Robotics/Other	276-1622
		6	AAA NiMH Rechargeable Batteries (installed in Joystick)	Req'd	VEX Robotics/Other	276-1696
		1	USB A-A Cable	Req'd[2]	VEX Robotics/Other	276-1403
BEST Servo Kit (VEX 270-		4	Futaba 3003/3004 Servo	Req'd	Tower Hobbies	LXH288 / LXZV41
		4	servo horn screw	Req'd	Tower Hobbies	FUTM2260 (10 pack)

		1	large round servo horn	Req'd	Tower Hobbies	LXH362
		2	4-arm servo horn	Req'd	Tower Hobbies	LXH365
		2	6-arm servo horn	Req'd	Tower Hobbies	LXH363
		2	24" servo extension wire	Req'd	Dymond Modelsport	10805
		2	40" servo extension wire (36" or 1000 mm also allowed)	Req'd	Dymond Modelsport	10415
		16	rubber grommet	Opt[5]	Tower Hobbies	FUTM2310 (20 pack)
		16	brass spacer	Opt[5]	Tower Hobbies	FUTM3650 (20 pack)
		16	servo mounting screw	Opt[5]	Tower Hobbies	FUTM2250 (10 pack)
BEST Motion Components Kit (VEX 270-4395)		1	1/4" bore, 24 tooth, (small) drive pulley	Req'd	VEX Robotics	270-4395
		1	1/4" bore, idler (dia. to match 24 tooth pulley)	Req'd	VEX Robotics	
		1	1/4" bore 120 tooth, (large) drive pulley	Req'd	VEX Robotics	
		1	170 tooth, 3 mm pitch, 9 mm wide HTD loop belt	Req'd	VEX Robotics/Other	
		1	3 mm pitch, 9 mm wide HTD strip belt, 3 ft long	Req'd	VEX Robotics/Other	
		1	1/4" dia. shoulder screw w/ #10-32 thread	Req'd	VEX Robotics	
		1	76mm roller blade wheel (78A to 82A) w/ bearings and 6mm spacer	Req'd	VEX Robotics/Other	
		1	6mm roller blade wheel axle (any style)	Req'd	VEX Robotics/Other	
		4	R4AZZ Ball Bearing (0.25 ID x 0.75 OD x 0.28 wide)	Req'd	VEX Robotics/Other	
Hub Provided		1	spare (replacement) servo horn screw	Req'd	Tower Hobbies	FUTM2260 (10 pack)
		2	small round servo horn	Opt[5]	Tower Hobbies	LXH364
		1	18" (or less) USB extension cable (between Cortex and VEXnet key)	Opt[5]	monoprice	5431

		1	VEX Programming Hardware Kit	Opt[2,5]	VEX Robotics	276-2186
		2	window alarm sensor	Req'd	McMaster-Carr	8039A12
		2	1/4" shaft coupler, with set screws	Req'd	McMaster-Carr	6412K11
		any	containers, bags, boxes	Req'd[2]	Hub Supplied	

2.2 Consumables Kit

2018 BEST Consumable Kit List (provided by hub)

Type	Check	Qty	Item Description
igus® Donated Parts		1 meter	Energy Chain, P/N E2-15-20-028-0, w/ 2 each mount brackets (P/N E2.150.20.1 & .2)
		2 ea	DryLin® N Linear Guide system, P/N NK01-27-2-450
		6 ea	igubal® Flange Mount Spherical Bearing, 1/4", P/N EFOI-04
		6 ea	igubal® Pillow Block Mount Spherical Bearing, 1/4", P/N KSTI-04
		6 ea	iglide® G300 Flanged Bushing, 1/4", P/N GFI-0405-06
		6 ea	igubal® 1/4" Rod End Bearing, 1/4"-28 Thread, P/N EBRI-04
		2 ea	DryLin® S, 1/4" diameter, hard anodized Aluminum Shaft, P/N AWI-04, 18 inch length
Plastic and Metal Stock		1 ea	1/4" thick polypropylene sheet, 12" x 24"
		1 ea	1/8" thick clear polycarbonate sheet, 12" x 24"
		1 ea	1/8" thick PVC Type 1 sheet 12" x 24"
		1 ea	0.5" thick x 2" wide 6061-T6 aluminum flat, 12" long
		1 ea	0.063" thick 5052-H32 aluminum sheet, 12" x 24"
		1 ea	0.5" diameter 6061-T6 aluminum round, 24" long
		2 ea	0.25" diameter AISI 1018 steel round, 24" long
Wood Stock		1 ea	7/16" to 1/2" thick 2' x 4' plywood, any grade
		1 ea	5/16" to 3/8" thick 2' x 4' plywood, any grade
		1 ea	3/16" to 1/4" thick 2' x 4' plywood, any grade
		2 ea	1" x 4" (nominal) #2 whitewood, 2 ft long
		1 ea	1/4" dia. oak dowel, 3 ft long

Pipes and Fittings		2 ea	3/4" schedule 40 PVC pipe, 5 ft long
		2 ea	1" schedule 40 PVC pipe, 5 ft long
		1 ea	4" PVC solid pipe, SDR 35 or ASTM D2729, 3 ft long (without integral coupling)
		10 ea	3/4" PVC 90 degree elbow (slip)
		10 ea	3/4" PVC tee (slip)
		6 ea	1" PVC 90 degree elbow (slip)
		6 ea	1" PVC tee (slip)
		2 ea	1/2" metal EMT conduit, 5 ft long
		1 ea	PVC cement, 4 oz or 8 oz
Hardware		4 ea	2.5" x 5/8" steel ZN, corner angle bracket
		4 ea	2" x 3/8" steel ZN, flat angle bracket
		2 ea	2.5"H x 1.75"W x 0.055" narrow hinge w/removable pin
		2 ea	1.5"H x 1-3/8"W x 0.05" narrow hinge w/nonremovable pin & 4 screws
		1 ea	extension spring for heavy doors, 13/32"OD, 0.0625" wire diameter, steel
		1 ea	6" x 6" steel turntable, 400 lb to 500 lb capacity
		1 ea	3/4" metal pipe hanger tape, 28 gauge, 10 ft long
Electrical		12 ft	18 gauge stranded copper wire, red insulation, single conductor
		12 ft	18 gauge stranded copper wire, black insulation, single conductor
		12 ft	CAT3 24 gauge, 4 twisted pairs of conductor wire
		16 ea	snap-plug terminals (bullet connectors), insulated, male (optional*)
		16 ea	snap-plug terminals (socket for bullet connectors), insulated, female (optional*)
		20 ea	quick-disconnect terminal, insulated, female, ~1/8" wide (optional*)
		10 ea	quick-disconnect terminal, insulated, female, ~3/16" wide (optional*)
		4 ea	sub-mini snap action switch, SPDT, 0.1 A, Omron P/N SS-01GL13PT

		2 ea	rotary potentiometer, linear, 10K ohm, 300°, panel mount, 6mm (approx.) shaft
		2 ft	heat shrink tubing, 1/4" OD expanded, 2:1 ratio, polyolefin, black
		10 ea	11" long x 0.18" wide nylon cable tie
		20 ea	4" long x 0.1" wide nylon cable tie
Tapes and Adhesives		1 ea	vinyl electrical tape, 3/4" wide, 60 ft
		1 ea	friction tape, 3/4" wide, 60 ft
		1 ea	all purpose duct tape, 2" (or 1.88") wide, 50 to 60 yd, (color optional)
		1 ea	painters tape, 1" (or 0.94") wide, 30 to 60 yd.
		1 ea	carpenters wood glue, 4 oz
		1 ea	5 minute epoxy, 0.85 oz
Threaded Fasteners		1 ea	1/4"-20 threaded rod, 3 ft long, steel
		25 ea	1/4"-20 hex nut, steel
		25 ea	1/4" SAE flat washer, steel
		25 ea	1/4" medium split lock washer, steel
		6 ea	1/4-28 x 1" screw, nylon (mates with igus rod end)
		6 ea	#10-32 x 1" socket head screw, high strength (150 KSI min) steel**
		25 ea	#10-32 x 1-1/2" machine screws, steel, round head, phillips **
		25 ea	#10-32 machine screw nuts, steel
		25 ea	#10 flat washer, steel
		100 ea	#8-32 x 1-1/4" machine screw, steel, pan head, phillips **
		100 ea	#8-32 machine screw nuts, steel
		25 ea	#8 medium split lock washer, steel (optional*)
		100 ea	#8 flat washer, steel
		25 ea	#4-40 x 1" machine screws, round head, steel **

		25 ea	#4-40 machine screw nuts, steel
		10 ea	#2-56 x 1" machine screws, pan head, phillips, stainless **
		10 ea	#2-56 machine screw nuts, steel
		10 ea	#2 flat washer, steel
		10 ea	wood screw eyebolts, 0.192 wire dia x .97 shank x .75 thread x .27 id, steel
		100 ea	#8 x 1" sheet metal screw, steel, hex head
		100 ea	#6 x 1" wood screws, steel, flat head
		25 ea	#4 x 3/4" wood screw, steel, slotted drive, round head
Miscellaneous		5 ft	3/4" nylon sticky back hook and loop fastener
		1 ea	#18 twisted nylon or polypropylene seine twine, 225 to 250 ft long (color optional)
		2 ft	3/8" thick, 1" wide, adhesive backed, gum rubber strip
		1 ea	bicycle inner tube (26" x 1.5" to 2.00")
		1 ea	60x65" universal brake cable with housing (white or black)
		25 ea	#10 Rubber Band (1/16" wide x 1-1/4" long)
		25 ea	#32 Rubber Band (1/8" wide x 3" long)
		100 ea	1 1/4" long paper clips, 0.033 dia wire (No. 1 Regular)
		1 ea	VEX motor mounting kit (4 mounts + screws)

Approved Optional Items (provided by team) [1]

Qty	Item Description
10 ea	wooden spring type clothes pins
2400 sq in	corrugated cardboard, 1/4" maximum thickness
2 ea	empty food/beverage PETE container with screw on cap/lid (2 liter max.) [2]
3 ea	wire coat hangers with or without plastic coating, 1/8" dia. max.
3 ea	solid core golf balls
1 ea	5 minute epoxy, 0.85 oz
3 ea	~10oz empty metal soup can with lid removed
24 lb	pennies (cannot be altered; bank wrappers allowed)
1 ea	8 oz. PVC primer
36 ea	craft "Popsicle" sticks (maximum dimensions; 4.75" long, 0.44" wide, 0.10" thick)
1 ea	aluminum paint grid for 5 gallon bucket
4 ea	CD or DVD disk (standard size: 120mm diameter x 1.2 mm thick)
25 ea	deck or drywall screws; 2-1/2" maximum length
25 ea	wire management clips/ties/wraps (can only be used on wiring)
2 ea	Team Custom Part [3]

Notes:
* Teams may use these optional items even if they are not supplied by the hub.
** Teams may substitute shorter screws of the same type and grade.
[1] These items can be used *in addition* to the items that are supplied by the hub.
[2] PET or PETE (polyethylene terephthalate) is identified by a number 1 recycling symbol.
[3] See separate document for rules and examples.

2.3 Design and Progamming Software Tools

BEST Robotics provides various design tools and programming software at no cost to participating BEST teams. This currently includes:

- Sketching software – 2D sketching
- Computer-Aided Design (CAD) software – 2D & 3D Solid Modeling
- Computer-Aided Manufacturing (CAM) software – 2-axis and 3-axis tooling
- Software Development (programming) and Simulation Environments
- Mathematics, Computational and Research software
- 3D Printer Driver software
- Technical Documentation Tools

Software access instructions are provided at Kickoff and should remain confidential. A password may be required to view these instructions and will be provided by the hub. There may be specific system requirements, internet access requirements, account creation requirements or other stipulations for team/team member use of the software. Unless otherwise indicated, all software and software licenses should only be used by BEST participants for the purpose of competing in the BEST program.

Section 3 **Game Specific Rules**

3.1 **Introduction**

A ***gyre | ˈjī(ə)r |*** is a naturally occurring vortex of wind and currents that rotate in a clockwise direction in the northern hemisphere and counterclockwise in the southern hemisphere. These create a whirlpool effect, whose vortex moves more slowly at the center and that is where marine plastic debris collects.

- There are 5 major gyres in the oceans worldwide, all of which are believed to contain plastic and persistent organic pollutants (POPs). These consist of carbon-containing chemical compounds that, to a varying degree, resist photochemical, biological and chemical degradation.
- The North Pacific Gyre, also known as the Great Pacific Garbage Patch, is estimated to be twice the size of Texas and swirls in the Pacific Ocean roughly between the coast of California and Hawaii.
- Currently, an estimated 11 million tons (and growing) of floating plastic covers an area of nearly 5 million square miles in the Pacific Ocean

In 1992, a shipping crate containing 28,000 plastic bath toys was lost at sea when it fell overboard on its way from Hong Kong to the United States. Nearly 30 years later, those same bath toys have revolutionized our understanding of ocean currents. Since then, scientists have used the duckies to calculate how long it took to complete a circuit through a gyre and to provide new information on how ocean currents interact throughout the globe.

Today the North Pacific Gyre is also home to what has been called the Great Pacific Garbage Patch, a massive island of floating debris, mostly plastic, that the gyre stirs like a giant pot of trashy soup. Though the rubber duckies have helped raise awareness about the gyre, most of what makes up the garbage patch is hardly so cute. Most of it consists of tiny plastic fragments and chemical sludge, but just about anything discarded that floats can be found there.

Further, there is a growing concern that the coral reefs around the globe are in major trouble and may be dying at a faster rate than predicted. The reefs are extremely sensitive to climate change and are struggling. So-called "bleaching"- a consequence of warming water is a major concern. There may be hope in a new project that proposes development of artificial reefs to lure fish and baby coral polyps to new locations. Of particular interest is the use of 3D printers to construct these reefs.

Given this background, BEST Inc. is very concerned about the impact of this pollution and climate change on our ocean and our planet. Further, this seems to be a problem that could easily lend itself to potential solutions through robotic operations. We see a need to evaluate the abilities of robots to work in the ocean environment, within the gyres themselves, to evaluate the pollution, assess effective recovery techniques and streamline the recycling process. Use of robots in the construction of artificial reefs is another area of interest. The 2018 game, *Current Events*, addresses these issues and will emphasize the multitude of ways engineers and scientists must work together to tackle global problems.

BEST Inc. poses this question: Can we tackle several problems at once by using recycled trash from the gyres to feed the 3D printers and construct new artificial reefs? Based on this question, BEST Inc. has developed a plan to harvest the recyclable plastics and microplastics from the gyres, process the materials for use in 3D printers and use the printers to make different types of building blocks for artificial reefs. Robots will be utilized in two roles: to harvest garbage from the gyres and to install building blocks on a framework to create new reefs. While constructed above water, after completion, the reefs will be lowered into place on the ocean floor. Of further interest to environmentalists is the impact of garbage on sea turtles. As a part of this project, teams must identify which type of garbage is the biggest threat to these animals and the removal of that garbage will become a high priority.

Of note, this year's BEST Robotics teams - made up of three individuals: Driver, Field Engineer, and Field Scientist - will have to communicate across disciplines, gather and assess data to inform the current and future missions, and design and build a robot to solve these problems. Further, teams must construct robots capable of completing the assigned objectives in a hostile ocean environment that allows multiple robots access to the same limited game pieces

To complete the objectives, robots must be able to "navigate and ride" the ocean currents to travel into the different gyres to sample, sort, assess and recover pollution types. Robots will be operating near the ocean surface and will have to "fight the currents" through the use of an unstable, elevated Current (rail) while working to recover and sort - from potentially turbulent gyres - the ocean's debris.

3.2 Objective

Design and build a prototype robot capable of harvesting specific types of garbage from the gyres, utilizing a Field Engineer on a recycle ship to construct different types of reef building materials and install these materials on an artificial reef framework. Assessment of a team's capability in meeting this goal will be based on points. A team and their robot can score points by doing the following:

- Remove, sort, recycle garbage and create reef blocks.
- Install reef blocks on an artificial reef structure.
- Data collection relevant to ocean currents and the health of sea turtles.
- Demonstrate robotic flexibility and diversity.

3.3 Game Field

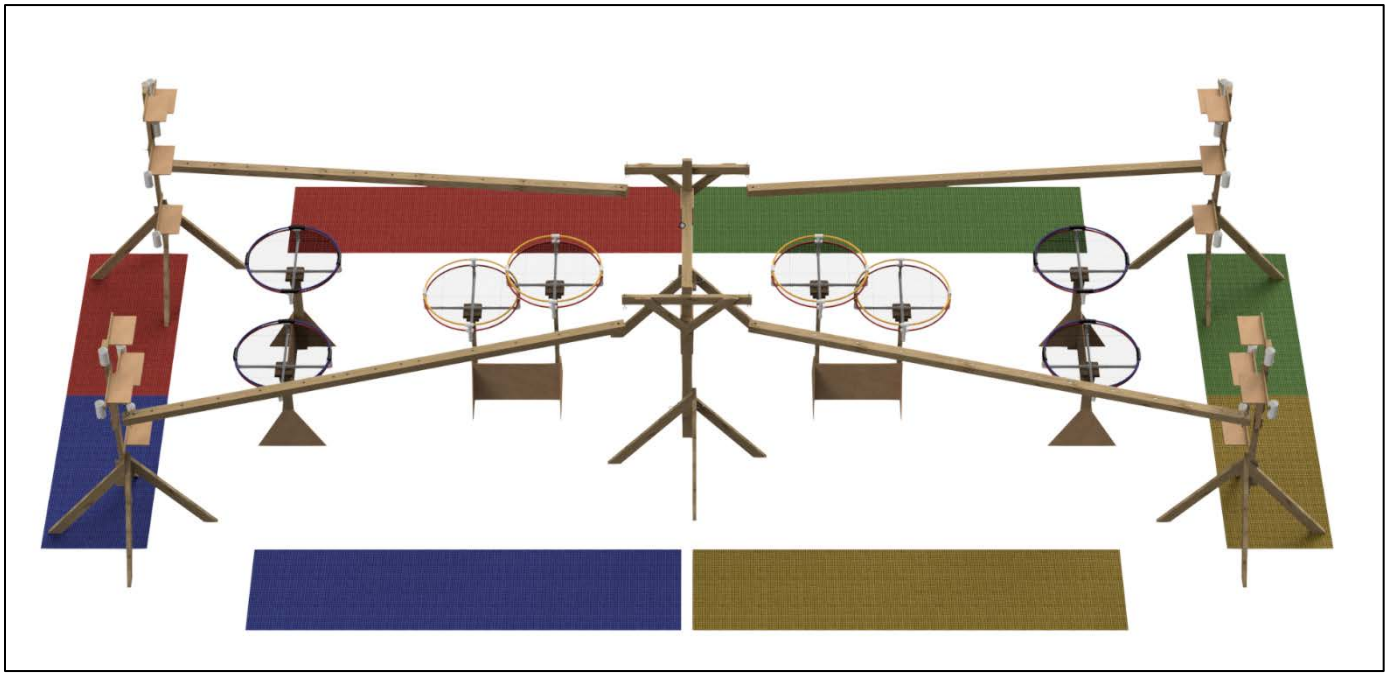

Figure 3.1 - Game Field

3.3.1 Currents

The field is made up of four quadrants called ***Currents*** (red, green, yellow, blue) located in a rectangular area measuring approximately 32’ x 12’. Each team has their own Current within quadrants. The Currents flow from the starting positions towards the gyres and artificial reefs - the pylons are higher at the starting point and lower at the artificial reefs. The Currents for all four quadrants flow outwards from the center of the field. Due to the nature of ocean weather, the Currents are not fixed but mounted such that they rotate several degrees right or left and may also have vertical movement. Gyres may be either on the left or right side of the current so robots must be flexible enough to account for which current they find themselves.

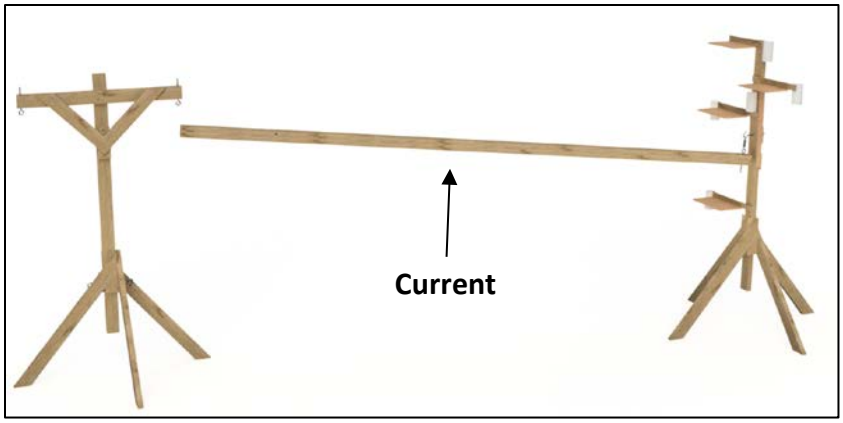

Figure 3.2 - Current

Currents are 14 feet long, 3½" wide and 3" high. Currents are attached at each end to support pylons. The lower end is attached using a four-inch spring and is approximately 60 inches off the floor. The upper, starting end is attached using ⅜" rope and is approximately 72" off the floor.

3.3.2 **Layout**

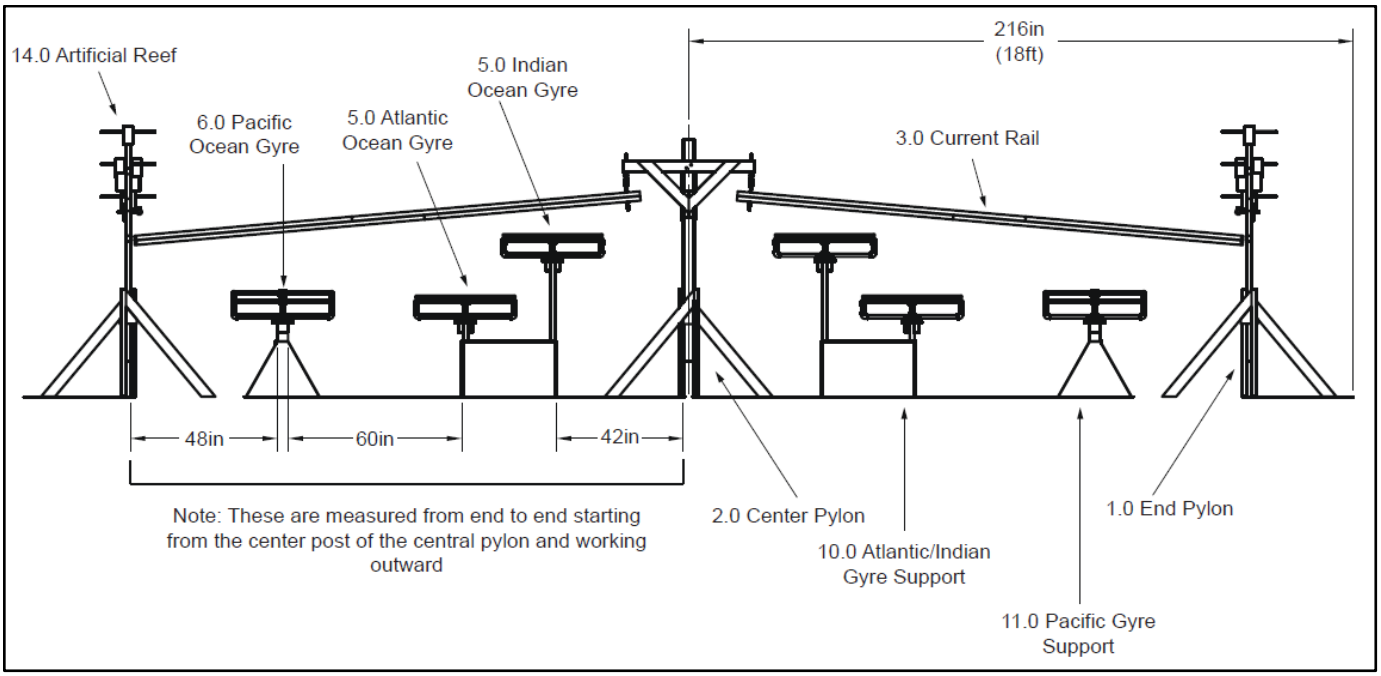

Figure 3.3 - Front view

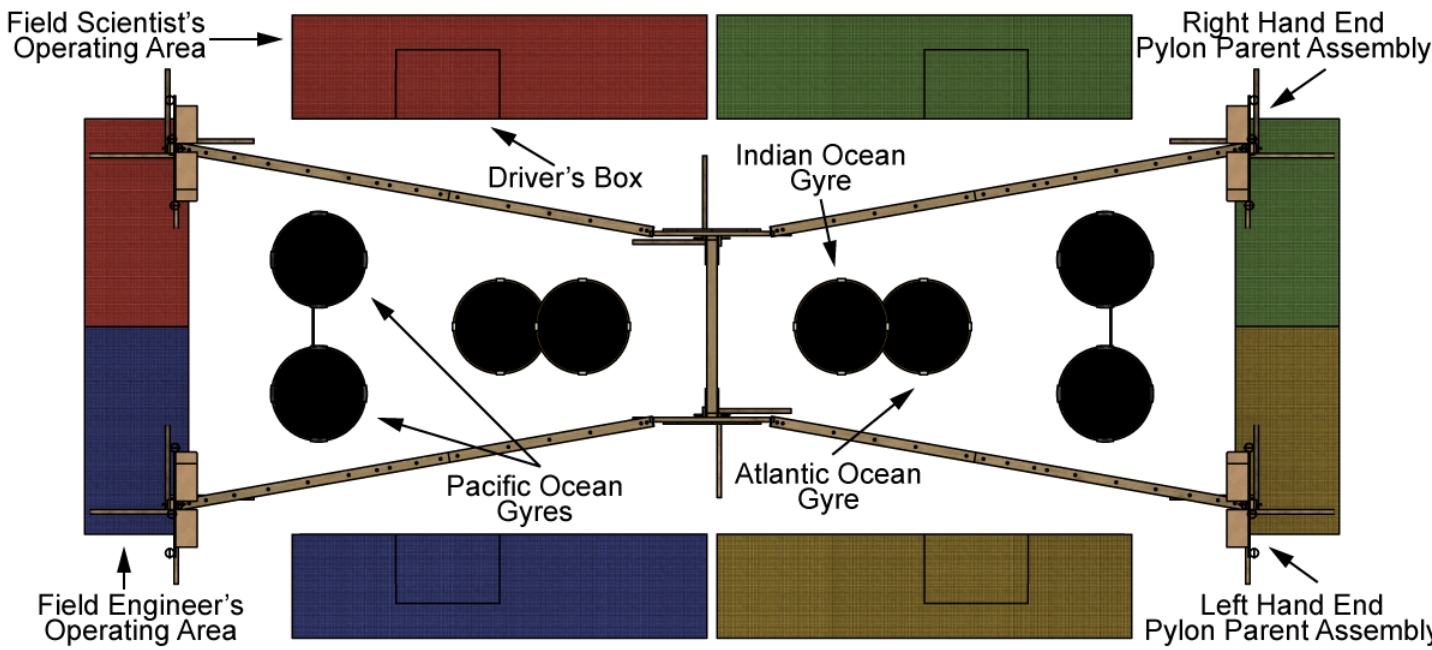

Figure 3.4 - Top view

3.3.3 **Gyres**

Along the path of the Current are four raised, circular platforms called ***gyres*** which are subject to the movement of ocean waves and currents. These circular gyres are approximately 36 inches in diameter and at various heights off the ocean floor. The gyres may spin about the Z-axis and wobble in the XY plane based on the interaction from the robots. Two robots will share access to 1 set of gyres (1 Indian, 1 Atlantic, and 2 Pacific gyres).

One **Indian Ocean Gyre** - Closest to the robot starting box (taller) One **Atlantic Ocean Gyre** - In the middle (lower)	
Two **Great Pacific Ocean Gyres** - Furthest from robot starting box (same height)	

All garbage, recyclable items and wildlife - except for rubber duckies - are located in the gyres. Different types of garbage are found in different gyres and are summarized in the table in Section 1.4.1 . All garbage and recyclable items will be randomly placed on the gyres and all items will be free to change position based on wave motion as mentioned above. Sea turtles can also be found in the gyres. Two rubber duckies will be found *floating* on the Currents at the beginning of the match.

3.3.4 **Robot Starting Box**

The Robot Starting Box is located at the higher end of the current. The robot must comply with the 24” x 24” x 24” limitation once mounted to the current. A mechanism has been installed to allow the current to lower to aid with the team’s mounting of the robot to the current, though this is not required unless requested. A single team member may assist with raising and lowering the current while the robot is being loaded. A loop knot is part of the rope system and acts as a “stop” for the rail in the down position. Individual hubs may determine how low they want the rail to be for loading and adjust knot as required. When the robot has been mounted to the current, the current must move back to the starting position.

The robot starting position is defined horizontally (along axis of current) by the 24” from the eye bolt to tape on the current. **Vertically the robot must be less than 8” above the top of the current.** The vertical component must not exceed 24” from the top of the robot to the bottom of the robot. Laterally the robot must not exceed 24” but can hang off either side of the current as far as desired. The robot must start in this configuration but may exceed it after match has begun.

3.3.4.1 **Starting Pin**

There will be a pin keeping the robot in the staring box and prevent it from moving down the current. It is the responsibility of the Field Scientist to remove the starting pin during the 30 second startup period. Robot must remain in the starting box until match begins.

3.3.4.2 **Compliance Fixture**

Figure 3.5 - Compliance Fixture

A special compliance fixture will be available which allows the robot to easily mount to a mock current to ensure containment in a 24” x 24” x 24” cube. This fixture is included in the field drawings.

3.3.5 Driver’s Box

The Drivers Box is a 2’ x 3’ rectangle located at the outside of the Current and approximately half way down the Current.

3.3.6 Field Scientist Operating Area (FSOA)

The Field Scientist (spotter #1) will operate in an area from behind the robot starting box to approximately two-thirds of the way down the length of the Current (approximately a 3’ x 12’ rectangle minus the area of the Driver’s Box).

Located in the Field Scientist Operating Area:

1. Wildlife Habitat Box - One 12” x 10” x 15” cardboard banker’s box - located below the robot starting box. The Field Scientist must utilize this box to store recovered sea turtles, garbage, and rubber duckies. The Habitat box is allowed outside of FSOA (the note on FEOA also applies to FSOA).
2. Fishing Net – One 36” long fishing net is provided to aid Field Scientists in catching and retrieving sea turtles, garbage, and rubber duckies. The fishing net is allowed to catch falling garbage and reach out into the ocean floor to retrieve items adrift at sea. It cannot touch robots, gyres, or currents.
3. Field Notes - 8.5”x11” paper with relevant information to the game (like the current flow analysis scenarios) that the Field Scientist can take to the field to assist in data assessment. Clipboard may be brought onto game field but can only be used for holding paper and/or decoration only. Neither are provided to teams (must bring your own). Writing on paper is allowed.

Note: The Wildlife Habitat Box may be placed outside of the Field Scientist Operating Area and retrieved at any time. Any sea turtles, ocean garbage or rubber duckies that fall out of Field Scientist Operating Area and is not inside a box/container can only be retrieved by the Field Scientist using the fishing net. If the Field Scientist leaves the area or picks up any sea turtle, ocean garbage or rubber duckie outside of the area without using the fishing net, a time penalty will be assessed, and the items will be confiscated by referees.

3.3.7 Field Engineer Operating Area (FEOA)

The Field Engineer (spotter #2) will operate in an area at the end of the Current (a 3’ x 6’ rectangle).

Located in the Field Engineer Operating Area:

1. Recycling Box - One 12” x 10” x 15” cardboard banker’s box will be provided to store and retrieve garbage and microplastics from the robot. The Field Engineer can use this box to store or move items to Reef Blocks and Filament Tubes. Recycling boxes are allowed outside of FEOA. The Recycling Box cannot be placed on Receiving Platform.
2. Reef Blocks - Three 7” x 7” x 7” boxes and six 6” x 6” x 4” boxes are provided for reef building. Reef blocks will have a tab to allow robots to manipulate the boxes. Boxes are allowed outside of FEOA but Field Engineer and garbage cannot be (garbage in box is ok). Garbage can be

retrieved by the Field Engineer from the Recycling Boxes to build completed Reef Blocks. Completed Reef Blocks are either stored in the Field Engineer's area or on the Receiving Platform (awaiting attachment to Reef Structure by robot). See Section 1.3.9 for more about reefs.

3. Filament Tubes - Four 2" x 18" clear filament tubes are also provided. These tubes can be filled with microplastics to create another type of reef building material. A band of colored electrical tape will be on the tube to indicate a completed filament tube. Tubes are either stored in the Field Engineer's area in their container or on the Receiving Platform (awaiting attachment to Reef Structure by robot).

Note: The Recycling Box, Reef Block, and Filament Tube container may be placed outside of the Field Engineer Operating Area and retrieved at any time. Any garbage that falls out of Field Engineer Operating Area and is not inside a box/container cannot be retrieved by the Field Engineer. If the Field Engineer leaves the area or picks up garbage outside of area, a time penalty will be assessed, and contraband garbage confiscated by referees.

3.3.8 Ocean Floor

Area under the Currents that is not defined by the Driver's Box, Field Scientist's, or Field Engineer's Operational Area. Driver's and spotters are not allowed in this area, only the robot can touch game pieces within this area. A Field Scientist or Field Engineer can reach into the ocean from their Operational Areas to grab boxes but not garbage. If a box is dropped and garbage is partially in the box/out of the box, the spotter can must grab the box and if the garbage falls out, it must stay in the ocean.

3.3.9 Artificial Reef Structure

BEST Inc. engineers have provided a structure at the end of the Currents where reef building materials are to be attached prior to lowering into the ocean. The structure consists of three level "planes" for installing the Reef Blocks and Filament Tubes. Four anchor points (3"x 6" PVC pipe) have been located on the structure for installation of Filament Tubes. Multiple size Reef Blocks can be installed on each plane and can be stacked.

Figure 3.6 - Reef Structure atop a pylon w/ Receiving Platform

Figure 3.7 - Closeup view of artificial Reef Structure

3.3.9.1 Reef Building Materials

Five types of Reef Blocks can be created from the garbage in the gyres by the Field Engineer:

Type	Description	Image
Filament tubes	18” x 2” mailing tubes filled with eight golf balls (image shows completed filament tube)	
Soup can blocks	6” x 6” x 4” box filled with four soup cans (image shows completed reef block)	

Eight ounce blocks	6” x 6” x 4” box filled with four 8 ounce bottles (image shows completed reef block)	
Sixteen ounce blocks	6” x 6” x 4” box filled with four 16 ounce bottles (image shows completed reef block)	
One Liter blocks	7” x 7” x 7” box filled with four 1 Liter bottles (image shows completed reef block)	

Note that recycled items within any Reef Block must be homogenous. The Reef Blocks are completed when all the specified number of garbage items are touching the bottom of the box (regardless of orientation). Only once completed may the robot take the Reef Block and attach it to the reef structure via the Reef Block Receiving Platform. All boxes have a tab to assist the robot in pickup and placement.

In the event the robot drops a box in the ocean, spotter cannot reach the box, and garbage is half in/half out of the box, only the garbage that appears to be touching the bottom of the box will score. If all 4 pieces of garbage appear to be touching the bottom, it will get points as a completed reef block. If one piece of garbage appears not to touch (or fell out completely), the remaining garbage will get points but will not be a complete reef block and not score those points.

Teams can earn points for each of the three options listed below in sequential order:

1. Garbage in Recycling Boxes.
2. Completing Reef Blocks or Filament Tubes
3. Attaching Reef Block to the Reef Structure by robot

3.3.9.2 Reef Block Receiving Platform

Once a reef block or filament tube has been completed, the Field Engineer must put the completed block or tube on the Reef Block Receiving Platform for the robot to retrieve and attach to the Reef Structure. The robot may only retrieve reef blocks or tubes from the Receiving Platform. The Field Engineer may not touch the reef block or tube if the robot is touching it. Any accidental touches may

incur the standard penalty. Recycling Boxes are too heavy for the platform and are cannot to be placed on it.

Figure 3.8 - Close-up view of Reef Block Receiving Platform

3.4 Game Pieces

3.4.1 Ocean Garbage

Item	Description	Image
10.75 oz soup cans	Approximately 2.5” x 5.0”, cans will be empty. May be stamped bottom or roll bottom.	
8 ounce plastic water bottles	Approximately 2.5” x 4.6”, bottles will be empty.	

16 ounce plastic water bottles	Approximately 2.5” x 8.0”, bottles will be empty.	
1 liter plastic bottles	Approximately 3.5” x 8.5”, bottles will be empty.	
Microplastics	Hollow, plastic practice golf balls.	

3.4.2 **Wildlife**

1. Sea Turtles: 3D printed Sea Turtles will be found in the gyres. Assessment of their eating habits will be critical. **Field Scientists are the only ones qualified to handle wildlife.**

Figure 4.1 - 3D Printed Sea Turtle

3.4.3 Data Assessment of Currents

1. Rubber duckies: Contain information about ocean currents through a number on the bottom of each ducky. See Section 1.6.3.2 for more details. Note: Rubber duckies are not considered wildlife (they're made out of rubber). Located directly on the Currents.

Figure 4.2 - Rubber ducky

3.4.4 Location and Quantity

3.4.4.1 Game Pieces

Location (Gyre)	Game Pieces Quantity & Starting Location					
	Soup cans	**8oz bottles**	**16oz bottles**	**1L bottles**	**Microplastics**	**Sea Turtles**
Atlantic	8	12	0	2	0	1
Indian	8	0	12	2	0	1
Pacific #1	0	2	2	6	40	0
Pacific #2	0	2	2	6	40	0
Total per half	16	16	16	16	80	2
Total per field	32	32	32	32	160	4

3.4.4.2 Boxes and Tubes

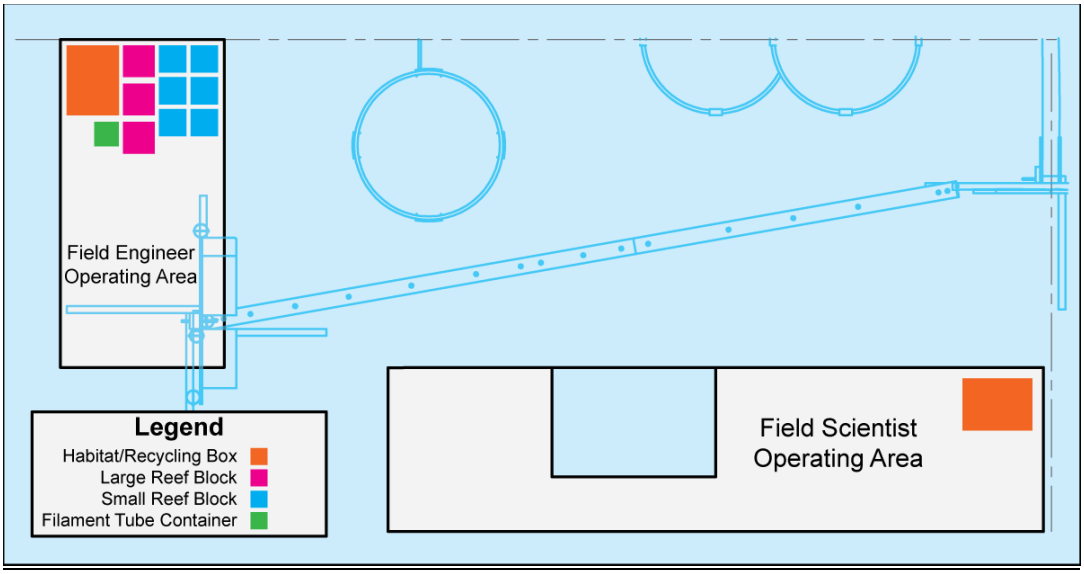

Figure 4.3 - Box and Filament Tube Locations (one quadrant)

Box placement does not have to be exact but must be placed so that all boxes can be easily accessed by Field Scientist or Field Engineer from within their operating areas. Boxes are allowed to be placed outside of operating areas.

3.5 Game Operations

3.5.1 Driver Activities

3.5.1.1 Permitted:

a. May use robot to drop game pieces into Habitat or Recycling Boxes.
b. May use robot to collect garbage and any other game pieces from any gyre, ocean floor, or current.
c. May use robot to grab Reef Blocks and Filament Tubes and install onto Reef Structure
d. Must keep his/her feet within the Driver's Box at all times.

3.5.1.2 Not Permitted:

a. May not touch any part of a gyre, game piece, or the robot.
b. May not operate their robot in a manner that intentionally causes damage to another robot or game field.

3.5.2 Field Engineer

3.5.2.1 Permitted:

a. May handle Recycling Boxes, Reef Boxes and Filament Tubes within operational area.
b. May manipulate Recycling Boxes and Reef Boxes to catch falling items from robot.
c. May handle game pieces only after deposited into a Recycling Box. Items that are on floor inside the Field Engineer Operating Area can also be handled.
d. May place Reef Box or Filament Tube on Receiving Platform for robot to grab and attach to reef structure.
e. Must keep his/her feet within the Field Engineer Operational Area at all times.
f. May handle game pieces that fall directly onto the floor from the robot into the FEOA.

3.5.2.2 Not Permitted:

a. May not touch/pick-up any game pieces that are on the ocean floor outside the Field Engineer Operational Area. **Only the robot** may retrieve or move game pieces on ocean floor.
b. May not install any reef blocks on the reef structure. **Only the robot** can install reef blocks.
c. May not touch garbage within a gyre or any part of a gyre itself.
d. May not touch Reef Structure.
e. May not touch robot or anything robot is touching (includes “handing” robot a box of any kind).
f. May not handle sea turtles.
g. No kicking/throwing of game pieces.

3.5.3 Field Scientist

3.5.3.1 Permitted:

a. Research may be brought on no more than two individual sheets of 8.5”x11” paper and may be clipped to a clipboard if desired. Both sides of the paper may be used. The clipboard may only have writing on it for decoration. Writing instruments for taking notes may also be used.
b. May use fishing net to catch sea turtles, garbage and rubber duckies dropped by the robot.
c. May use fishing net to retrieve items on the ocean floor.
d. May manipulate sea turtles and rubber duckies to gather data only once they are retrieved.
e. May communicate with other Field Scientists in other quadrants to gather current data.
f. May communicate with Driver and Field Engineer to pass information related to sea turtles.
g. Must keep his/her feet within the Field Scientist Operational Area at all times.

3.5.3.2 Not Permitted:

a. May not touch any part of field or gyres.
b. May not touch any items on ocean floor.
c. May not touch robot or anything robot is touching (includes “handing” robot Habitat Box).

d. May not use fishing net to retrieve items which are in contact with the robot, gyres or currents.
e. May not use fishing net to throw items or push to another spotter.
f. May not use clipboard to interact with game field or pieces.
g. No kicking/throwing of game pieces.

3.5.4 Interaction with Other Robots and Playing Field

The spirit and intent of this game is for teams to construct robots capable of completing the assigned objectives in an environment that allows multiple robots access to limited game pieces.

Therefore:

1. Robots are expected to get in each other's way during the match. However, intentional blocking may result in a 20 second removal of controller penalty at the discretion of the referee.
2. Robots are not allowed to take game pieces in the grasp of, or contained on, another robot. This will result in a 20 second removal of controller penalty - at the discretion of the referee.
3. Robots may not remove reef blocks installed on another team's reef framework.
4. Robots are not allowed to use playing field items (i.e. gyres, pylons, etc) for support or balance.

3.6 Scoring

In general terms, teams can score points by recovering garbage. However, teams with a robot and a Driver/Field Scientist/Field Engineer team that can meet all the game objectives will be awarded additional points as outlined below. All points are determined at the end of the match.

3.6.1 General Scoring Requirements

1. Any game piece is considered scored if it is located within a box (Wildlife Habitat Box, Recycling Box, and any Reef Block/Filament Tube (complete or incomplete))
2. Only boxes/filament tubes touching any part of the floor, installed on Reef Structure, or sitting on Receiving Platform at the end of the match will be scored (boxes held by spotters or robots will not be counted).
3. Any game pieces or boxes touching a spotter, robot, or floor (outside of a box) will not be scored.
4. Scoring positions are checked after the match when all game pieces have come to rest or 10 seconds after the match has ended, whichever comes first.

3.6.2 Scoring Summary

Location	Possible items	Points
Field Engineer's Recycling Box	8 oz, 16 oz, 1 L bottles, 10.75 oz cans, rubber duckies	**10** points each Note: Turtles in Recycling Box result in 0 points and no bonus
	Microplastics	**5** points each
Field Scientist's Habitat Box	8 oz, 16 oz, 1 L bottles, 10.75 oz cans, rubber duckies, sea turtles	**10** points each (including each turtle)
	Microplastics	**5** points each
Completed Reef Block in Field Engineer's Operational Area	8 oz, 16 oz, 1 L bottles, 10.75 oz cans	**25** points for each block
Completed Filament Tubes in Field Engineer's Operational Area	Microplastics	**50** points for each tube
Installed Reef Block/Filament Tube on Reef Structure	Reef Block Filament Tube	**100** points for each block **100** points for each tube
Sea Turtle Bonus		**2x** points for garbage found inside turtle **See section 3.6.3.1**
Current Flow Analysis	Rubber duckies	**150** points **See section 3.6.3.2**
Flexibility Bonus		**See section 3.7.1**

3.6.2.1 Example Scoring Scenarios

1. 4x 8oz bottles (40 pts), 4x microplastics (20 pts), 2x duckies (20 pts), completed 8oz reef block (25 pts), partial filament tube (0 pts), installed reef block (100 pts), correct current flow analysis (150 pts) = 355 pts
2. 6x 16oz bottles (60 pts), 8x microplastics (80 pts), 1x sea turtle w/microplastics inside (10pts), 2x duckies (20 pts), completed 16oz reef block (25 pts), partial 16oz reef block (0 pts), completed filament tube (50 pts), installed reef block (100 pts), installed filament tube (100 pts), incorrect current flow analysis (0 pts), flexibility bonus #2 (200 pts) = 645 pts

3.6.3 Data Analysis

3.6.3.1 Sea Turtle Bonus

As previously noted, BEST Inc. scientists have made safeguarding sea turtles from harmful garbage a priority. To support this initiative, teams can assist by capturing a sea turtle and having their Field Scientist determine what specific type of garbage it is eating. Teams will be awarded bonus points if they assist in this effort to protect the sea turtles. Since sea turtles travel into different gyres, the type of garbage they eat may change from match to match. Teams must plan on checking the sea turtles eating habits in each match to ensure their data is accurate. Teams cannot score the Sea Turtle Bonus unless they have captured and inspected a sea turtle.

Inside the stomach of each sea turtle (all turtles in a match will have the same item but the item will change from match to match) will be a picture of one of the pieces of garbage: 8 oz, 16 oz, 1 L bottles, microplastics. Once a turtle is captured AND inspected by the Field Scientist, the point value for those recycled materials will be doubled. Since there are two sea turtles located on each half of the field, teams may gather both turtles but may only receive the Sea Turtle Bonus once. Each captured sea turtle will count as 10 points toward the match score. Turtles must be captured by the Field Scientist and placed in the Wildlife Habitat Box before the end of the match. Field Engineers are not equipped to safely handle wildlife and will therefore not score 10 points or receive priority bonus if turtles are found in Recycling Box. Sea Turtles range in mass from 60g to 120g ± 10 grams.

3.6.3.2 Current Flow Analysis

Rubber duckies have been used by scientists to calculate the direction of currents. This is important information that informs future missions into the area. There are 24 possible ways that the current could be flowing (shown in the table below). For example, in **Scenario A**, the duckies on the Green current will have a 1 on the bottom, the duckies on the Red current will have a 2 on the bottom, the duckies on the Yellow current will have a 3 on the bottom, and the duckies on the Blue current will have a 4 on the bottom.

Field Scientists may communicate with their Field Engineer to figure out their duckie information and they may collaborate and communicate with other Field Scientists to determine the Current Flow. Duckies may be scored in either the Wildlife Habitat Box or the Recycling box for 10 points, independent of the Current Flow analysis.

Before the start of the match, the Field Scientist will be handed their scoresheet for the match by the referee. The Field Scientist must indicate on the scoresheet the Current Flow scenario by circling the letter of their choice (only one mark allowed). The Field Scientist must also indicate the contents of the sea turtle, if scored, to receive the Sea Turtle Bonus. The Field Scientist must give the scoresheet to the referee before the end of the match or place it in the Habitat Box. Correct Current Flow Analysis is worth **150 points**. There is no penalty for guessing an incorrect flow order.

If the match has less than 4 teams, the teams in play will receive the vacant quadrant(s) information only if they retrieve the duckie from their quadrant. Once their duckie has been retrieved, they may ask the referee for the vacant quadrant information.

Flow Scenario	Current flow order 1	2	3	4
A	Green	Red	Yellow	Blue
B	Green	Red	Blue	Yellow
C	Green	Blue	Red	Yellow
D	Green	Blue	Yellow	Red
E	Green	Yellow	Blue	Red
F	Green	Yellow	Red	Blue
G	Yellow	Red	Green	Blue
H	Yellow	Red	Blue	Green
I	Yellow	Blue	Red	Green
J	Yellow	Blue	Green	Red
K	Yellow	Green	Blue	Red
L	Yellow	Green	Red	Blue
M	Blue	Red	Yellow	Green
N	Blue	Red	Green	Yellow
O	Blue	Green	Red	Yellow
P	Blue	Green	Yellow	Red
Q	Blue	Yellow	Green	Red
R	Blue	Yellow	Red	Green
S	Red	Green	Yellow	Blue
T	Red	Green	Blue	Yellow
U	Red	Blue	Green	Yellow
V	Red	Blue	Yellow	Green
W	Red	Yellow	Blue	Green
X	Red	Yellow	Green	Blue

Number of Pieces Known	Probability of Guessing Correct Current Flow
0	4%
1	17%
2	50%
3	100%

3.6.4 Flexibility Bonus

Teams with a robot that demonstrates operational diversity can achieve the following bonus points.

Combination		Points
A	Two completed Reef Blocks using two different types of garbage installed on reef structure	200
B	One completed Reef Block (any type) and one Filament Tube both installed on reef structure	200
C	Four completed Reef Blocks using each type of garbage (8 oz, 16 oz, 1 L bottles, soup cans) and one Filament Tube installed on reef structure	400

3.6.5 Advanced Competition Challenge

Ocean conditions are constantly changing; therefore, adjustments will be made to the field during the competition as detailed below.

Possible adjustments:

- Current Surge - Adjust height of outer current to lower eye bolt.
- Ocean Swell - Lower Atlantic Ocean gyre 11.5”
- Turtle Migration - Move sea turtles to Pacific Ocean gyre (1 turtle in each gyre)

Adjustments will occur as follows:

- At hub competitions: 1 of the 3 possible adjustments will be implemented AFTER the Wildcard phase and will remain in effect for the remainder of the competition. The exact adjustment will be assigned to the hub before the competition begins and will be announced to participating teams 5 minutes before the Semifinals phase begins.

- At championship competitions: 2 of the 3 possible adjustments will be implemented, the 1st after the Wildcard phase and a 2nd after Semifinals phase. Each adjustment remains in effect throughout the remainder of the competition. The exact adjustments will be randomly selected by the championship host before the competition begins and will be announced to participating teams 5 minutes before the affected phase begins.

Teams should be prepared to make any necessary adjustments to their robots during the 5 minute notification period.

3.7 Additional Information

- Scoring software will randomly calculate field setup parameters. Referees will follow these parameters to set turtle bonus items and rubber duckies in proper place at the beginning of each match.

- Supplemental Documents
  Note: Due to the complex nature of this game, additional documents are provided to hubs and teams for suggestions in field assembly and game play. Generic and Game specific rules always overrule these guides as they are not authoritative.
  - Field Assembly Guide - Assists field builders in construction of playing field
  - Game Setup Guide - Assists hubs and teams better understand how the game works and how to make game play consistent across hubs at competition

- Below is a sample scoresheet for Field Scientist's reference. Each team member should be familiar with this scoresheet so they know where to make their marks regarding data analysis (top half only).
  - Late checkbox is provided in case Field Scientist makes analysis decision after match is completed. It will result in zero points for the analysis.

SAMPLE Scoresheet

Team #: _____ Round: _____

Duck Current Flow Analysis: (circle one) ☐ Late?

A	B	C	D	E	F	G	H	I	J	K	L
M	N	O	P	Q	R	S	T	U	V	W	X

Sea Turtle Bonus (circle if rescued): 8oz 16oz 1L Microplastic

To be filled in by referee			
Item	**# Collected**	**# Reef boxes complete**	**# Reef boxes installed**
Cans			
8oz bottle			
16oz bottle			
1L bottle			
Microplastics			
Rubber duckies			
Turtles			

See scoring calculator at http://aub.ie/cecalc. Password "Recycl3m3"

Section 4 Awards and Judging

4.1 Head-to-Head Competition Judging

The head-to-head competition results for a team are dependent on the following criteria:

- The Team Demographics form must be completed and submitted by the participating team prior to competing
- An Engineering Notebook must be submitted by the participating team prior to competing
- All team members (students, teachers, mentors) should individually register in the BEST National Registry (http://bestnationalregistry.eventbrite.com) prior to competing on Game Day
- A participating team must be in compliance with the General Rules (constraints, etc.) and successfully pass the Robot Compliance Check prior to competing
- The Final head-to-head competition ranking is determined through robot performance using the Game Specific scoring rubric defined in Section 3 Game Specific Rules.

Any team that does not meet these criteria may be eliminated from consideration of awards and/or advancement.

4.2 The BEST Award

The BEST Award is presented to the team that best embodies the concept of *Boosting Engineering, Science, and Technology.* This concept recognizes that inclusiveness, diversity of participation, exposure to and use of the engineering process, sportsmanship, teamwork, creativity, positive attitude and enthusiasm, and school and community involvement play significant roles in a team's competitive experience and contribute to student success in the competition beyond winning an award.

In accordance with the BEST philosophy, **materials submitted by teams must be the work of students.** The involvement of student peers in auxiliary roles to support a school's official BEST team – i.e., journalists, photographers, artists, musicians – is encouraged.

Space constraints at each regional championship site will determine the number of teams that can compete for the BEST Award at the championship (check with the specific guidelines published by each regional championship). For a team to be eligible to compete for the BEST Award at any of the regional championships, the team: (1) must have placed in the top 3 teams in the BEST Award judging at their local hub competition, and (2) must agree to compete in all five of the BEST Award component categories at the regional championship.

4.2.1 Judging Evaluation and Criteria

Evaluation of competitors will be based on the criteria outlined here. An evaluation score up to 100 possible points will be composed of the following components:

Component I - Engineering Notebook (mandatory for ALL teams)
Component II - Marketing Presentation (at hub's discretion for BEST Award inclusion)
Component III – Team Exhibit and Interviews (at hub's discretion for BEST Award inclusion)
Component IV - Spirit and Sportsmanship (mandatory for BEST Award)
Component V - Robot Performance (mandatory for BEST Award)

Hubs competitions are required to judge at least four of the five components using one of the three following scenarios:

Scenario 1: (**preferred**)

Judged Components	Point Value
Engineering Notebook	30 points
Marketing Presentation	25 points
Team Exhibit and Interviews	20 points
Spirit and Sportsmanship	10 points
Robot Performance	15 points
	Total 100 points

Scenario 2:

Judged Components	Point Value
Engineering Notebook	30 points
Marketing Presentation	25 points
Spirit and Sportsmanship	10 points
Robot Performance	15 points
	Total 80 points

Scenario 3:

Judged Components	Point Value
Engineering Notebook	30 points
Team Exhibit and Interviews	20 points
Spirit and Sportsmanship	10 points
Robot Performance	15 points
	Total 75 points

Refer to Section 5 for details on each of the Judged Components.
Refer to the ***2018 Awards and Judging – Hub Logistics*** document for the specific judging scenario at your local hub. Championship events will always employ Scenario 1.

4.2.2 Judging Procedure

- A distinguished team of judges from private and public sectors with technical and non-technical expertise will evaluate teams. Judges will serve on a rotation schedule.
- As each team completes a component, it will be assigned a component score that is the average of individual scores of the judges reviewing it.
- Teams should know in advance that scores among many teams frequently differ by only fractions of a point.

4.2.3 Judging Results

- Each team advancing to the regional championship will be provided with a copy of its score sheets following their local competition. Score sheets of non-advancing teams will be provided upon request.
- Teams advancing to the regional championship can use judges' comments to make improvements as they wish subject to the schedule restrictions of the regional championship (e.g., Engineering notebook due dates).

4.2.4 BEST Award Recognition

The teams ranked first, second, and third in the BEST Award judging will receive trophies superior to the teams finishing first through third in the Head to Head robot competition.

4.3 Simulink Design Award

The "BEST Simulink Design Award" sponsored by MathWorks is an award open to all teams participating in the competition. The award is presented to one team in each of the 5 BEST regions (Frontier Trails, South's, Texas, Denver and Pittsburgh) that best applies the 'Simulink Support Package for VEX' based on the judging criteria below and their robot's performance in the competition. Any team using MathWorks MATLAB/Simulink to design their software (i.e., robot program) is eligible.

4.3.1 Applying for the Award

To apply for the award, teams are required to submit their best Simulink model and a short video describing their program design using Simulink. The entries must be submitted before 11 PM (local time) two weeks before their respective regional championship. See the ***2018 Awards and Judging – Hub Logistics*** document and the BEST Robotics website for more information on deadlines.

Information that teams need to provide when submitting their entry:

- Name of School
- BEST Hub (know which hub you belong to)
- Team Contact
- Team Contact Email Address (**important:** all entries are tied to the email address)

- # Students on the Team
- Simulink Model File (.slx or .mdl file)
- Link to YouTube Video (3 min. maximum)
- Brief Description (256 chars) of how the team used Simulink to program their robot

A PASSCODE is required to submit your entry. The PASSCODE will be the same as the current year's Game File Password. Contact your Hub to get the PASSCODE.

4.3.2 Simulink Design Award Guidelines

- Only one entry per team is allowed.
- All teams can participate for the award within their region. There will 1 winner per region.
- Every entry should include the following items:
    - 1 Simulink model file (*.slx)
    - 1 video link (use YouTube only)
- The Robot program must be created using Simulink. Submissions of programs designed using other software will not be accepted. The submitted Simulink file should not be a pre-built example model or the default program. It should be your own program or a modification of the existing examples or default program.
- The video should be no more than 3 minutes in length and include at least a 1.5 minute overview about the program design (e.g. a screencast of the Simulink model with voice over).
- Multiple submissions may be made by a team prior to the submission deadline always using the same email address during submission. Only the last submitted entry will be scored.
- Final submissions for this award must be uploaded at http://www.bestinc.org/simulink_award/form.php before the stated deadlines.

4.3.3 Simulink Design Award Evaluation

The award will be given to one team from each region and be based on the judging criteria and robot performance in the competition. The following criteria will be used for judging each entry using a maximum 100pt scale. The Simulink model is worth up to 70 points and the video is worth up to 30 points.

Simulink Model	**Possible Points**
Creativity- Innovative, creative and original work	5
Functionality – Error-free and designed to achieve the game tasks	10
Software Design Practices – Best practices like commenting, block naming etc.	15
Difficulty and Mastery – Level of Simulink knowledge demonstrated in executing the tasks	20
Readability - Clean, organized and easy to comprehend	15
TOTAL	**70**
(YouTube) Video	**Possible Points**
Creativity - Interesting, innovative and informative	5
Quality of the video – Video making process and technical execution	10

Concept – Engaging, coherent and appropriate	10
Clarity – Message is clear and well-communicated	4
Adherence to Guidelines - Video length and content on Simulink usage	1
TOTAL	**30**
Total Possible Points	**100**

4.3.4 Simulink Design Award Recognition

The winning teams will be awarded the following:

- Cash award
- Trophy with inscription 'BEST Simulink Design Award – by MathWorks', and
- a MathWorks hat for each team member

The winning teams from each region will be recognized on the BEST website (www.bestinc.org) and their regional championship website.

4.4 Additional Awards

Refer to Section 7 Standard Required Awards for details on additional awards provided at the Hub and Championship levels.

Section 5 Judged Components

5.1 Engineering Notebook (30 Points)

5.1.1 Notebook Requirements

- ALL participating teams are required to submit an Engineering Notebook at both the local competition and the regional championship following the requirements stated herein. All notebooks will be evaluated on a 30-point scale.

- For competitions having 32 or fewer total teams, the notebook scores of all teams will be used to determine which 4 teams earn a chance to participate in the single "wildcard" match. The winning wildcard team will be one of eight total teams that advance to the semifinals phase.

- For competitions having greater than 32 total teams, the notebook scores of all teams will be used to determine which 8 teams earn a chance a chance to participate in one of the two "wildcard" matches. The two winning wildcard teams will be two of sixteen total teams that advance to the semifinals phase.

- The purpose of the notebook is to document the process the team used to design, build, and test their robot.

- The notebook may be delivered in electronic format (PDF only) or in physical format as determined by the local hub and regional championship.

  NOTE: The preferred delivery format is electronic (PDF). Please see the ***2018 Awards and Judging – Hub Logistics*** document for the specified format and information on when and how the notebook is to be submitted.

- The notebook must meet the following specifications:

  - All physical notebooks must be submitted in a *standard* 3-ring binder with a maximum 2" ring size

  - A cover sheet / title page must identify the school, team name, teacher contact, and team number

  - 35 typed **single-sided** pages or less (note that title/cover page and Table of Contents page(s) will not be counted as part of the 35 pages)

  - Standard, 8 ½" x 11" paper, double-spaced, 1" margins, and Times New Roman (preferred) or similar business-style font no smaller than 12 pt. Single-spacing is acceptable in tables and outlines.

  - Teams may include a supplemental appendix of no more than 20 double-sided sheets (40 total pages) of information. The appendix may include support documentation such as drawings, photos, organization charts, minutes of team meetings, test results, etc. *This material should directly support the process described in the primary document and NOT reflect activities related to community or promotional efforts, spirit development, or team-building.*

5.1.2 Notebook Evaluation

- The notebook will be judged on the documentation of the team's:
  - ***Implementation of the Engineering Design Process***
    - Evidence that the engineering process was effectively used.

  - ***Research Paper***
    - Correlation between the current year's game theme and how related technological practices or scientific research is being used at a company/industry/research lab in the team's state or region; Any information related to the game theme, such as history, famous inventor(s), or major milestones; Analysis of the game theme/problem and the related technology's impact on the human experience, our needs, adaptations, and progress with solutions throughout history; Creativity in linking the game theme to appropriately related science/technology content; Proper use of grammar and composition throughout the paper; citations of sources used to gather information for the paper
    - The research paper must be a minimum of 2 pages and maximum of 5 pages (of the allotted 35 pages)

- ***Brainstorming Approaches***
  - How well organized and productive was the brainstorming approach used? How well was the brainstorming approach documented?

- ***Analytical Evaluation of Design Alternatives***
  - Use of analytical and mathematical skills in deciding upon and implementing design alternatives

- ***Offensive and Defensive Evaluation***
  - Analysis of the gaming strategies and design elements used to achieve specific team goals

- ***Software Development Process***
  - Evidence that a software development process was effectively used including
    - Project scope/requirements/specification ("what" the robot should do without stating how)
    - Design ("how" the software will achieve the scope/requirement/specification)
    - Implementation (tools, methods and techniques used in your programming)
    - Test/Verification (methods used to verify correct operation of the robot program)
    - Deployment (source code management, release, download frequency, etc.)
  - Evidence that software design methods/techniques were explored and utilized.

- ***Safety***
  - Evidence that safety training occurred and safe practices were followed to prevent students' misuse of tools and other devices/equipment that may result in personal injury or damage to property

- ***Support Documentation***
  - Proof of team members' (students, teachers, mentors) individual registration at http://bestnationalregistry.eventbrite.com; this can be a simple roster with order# references
  - Team organization, team minutes, test results, CAD/other drawings, photos, etc. that support the main document

- ***Overall Quality and Completeness of Notebook***
  - Organization, appearance, adherence to specifications, quality of content

5.2 Marketing Presentation (25 Points)

5.2.1 Presentation of Brand & Product

Your team is a start-up and you're pitching your latest invention/product to a group of decision makers at *National Big Company's* headquarters. Your presentation should include information about your company that will help to build trust between you and your potential client. Storytelling will be an important tool that can add personality to your brand, demonstrate how

BEST is a positive experience, and create a stronger connection with your client. Your company's Brand Promise will establish a shared understanding of the client's problem and how your product delivers the solution. The details about the engineering team and the manufacturing process that you incorporate will highlight the unique characteristics of your product compared to your competitor's.

Your team's presentation must close with a call to action for your client and mutually agreed upon next steps.

5.2.2 Marketing Presentation Guidelines

- A minimum of 4 and maximum of 8 students should actively participate in the presentation.
- Each BEST Award team will sign up for a presentation time to occur at a time designated by the local hub or regional championship.
- At both the Hub and Championship events, sponsors, public officials, marketing faculty, and media should be invited to serve as judges and/or participate as audience members during the presentations. The size of the audience, beyond the number of judges, is space-dependent and decided by the hub. See the ***2018 Awards and Judging – Hub Logistics*** for details at your hub/championship event.
    - Judges may role-play as department heads, financial officers, coo, sales and ceo within *National Big Company* and may rotate those roles at the start of each presentation
    - An official room monitor (not a judge) will be in the room for each presentation to help facilitate discussion and track time.
- Adults are not allowed to participate in the presentation/discussion, including setting-up and dismantling the presentations.
- Teams may provide the judges with a one-page, two-sided paper handout. The size cannot exceed 8 1/2" x 11". No other giveaways or product samples may be distributed. Other materials/models may be used during the presentation/discussion for demonstration purposes.
- Teams should represent diversity in grades, gender, race, ethnicity and abilities. Teams are encouraged to share and demonstrate how their efforts are inclusive.
- Videotaping/photographing by team representatives will be allowed during the presentation, however, the person(s) handling videotaping will be counted in the 8 maximum students allowed.
- The presentation format is the prerogative of the team.
- The team must provide any equipment it wishes to use or check with the local hub for information about what equipment can be provided.

5.2.3 Marketing Presentation Logistics

- There will be a check-in station in the general area of the presentation rooms where teams should check in prior to their time slot.

- The order and breakdown for the 25-minute presentation time period is as follows:

    - *2 minutes*: Set-up
    - *16 minutes:* Presentation, Discussion/Questions
    - *5 minutes:* Final Questions, Close the Sale
    - *2 minutes:* Break-down and clear room

    Note: Teams not requiring set-up or break-down time may utilize that time for their presentation (for a total presentation time of up to 20 minutes).

- At least five minutes will be scheduled between presentation sessions to allow judges time to confer without the team present.

- The local hub or championship will provide event-specific information (times, locations, etc.). Refer to the ***2018 Awards and Judging – Hub Logistics*** document for these additional details.

5.2.4 Marketing Presentation Evaluation

- Presentations will be evaluated with consideration of:

    - ***Company Structure, Professionalism and Quality of Presentation***
        - Team introductions with names and roles; company overview of number of employees across departments; team demographics; brief budget overview
        - Personal story using the #Thanks2BESTrobotics campaign
        - Professionalism, Preparedness, Quality of visual presentation
    - ***Brand Promise***
        - Define the tangible benefit that makes a product or service desirable.
        - Present a cohesive brand; present brand elements that work together to express how consumers experience the brand and why they choose the product
        - Explain how design, manufacturing process, and use of technology relate to the brand and the benefit
        - Identifies factors that differentiate your brand and product from the competition
    - ***Promotion and Outreach***
        - Share a well-defined outreach strategy, publicity efforts, tactics, materials and audience metrics (how many people you reached, it can include social media views)
        - Articulate the impact of outreach efforts; present data on the social media exposure for their team's stories using the #Thanks2BESTrobotics campaign
        - Gather and present data on the target audiences
        - Create original infographics or other advanced presentation materials
    - ***Take the Client Through the Sales Process***
        - Confirm the needs of the customer; engage in conversation; ask for clarity in face-to-face meetings

- Provide convincing reasons about how your product meets the needs of the customer
- Ask for the sale, negotiate and be prepared to define specific steps to move the sale forward even if the client is undecided about the purchase
- Teams should have a clear process for taking the conversation further and define next steps with the client (judges). These next steps must be well-defined, include a time-frame and a person who will be accountable for making them happen.

5.3 Team Exhibit and Judges Interview (20 Points)

5.3.1 Demonstrate your Brand in Action

Your team's exhibit should be a brand experience that not only showcases your company and product, but also illustrates how your brand engages with the community. The exhibits' visual elements should tell the story about your brand, about your community and how the BEST program bolsters your interest in STEM majors and careers. Demonstrate your outreach efforts by visualizing data about the frequency and reach of the actions you took.

5.3.2 Exhibit and Interview Guidelines

- Refer to the ***2018 Awards and Judging – Hub Logistics*** document for standard table size at your local hub competition and availability. At regional championships, each team will be provided with a standard six-foot long table (approximately 29 inches wide) upon request.
- An 8' X 8' X 8' exhibit space will be allocated per team at your local hub and the regional championships. All exhibit content must remain within the defined exhibit area.
- All exhibits must display the national BEST Robotics logo in plain view
- Skirting for the table will not be provided.
- Each team should bring one extension cord and one power strip for any electrical needs. Refer to the ***2018 Awards and Judging – Hub Logistics*** document for possible electricity and electrical limitations at your local hub competition.
- Teams are encouraged to use recycled, up-cycled and repurposed items and to avoid using expensive store-bought display boards and structures. Consideration is given to creative and hand-made exhibit props.
- Any audio-visual equipment needs and extra extension cords will be the responsibility of the team.
- Each team is responsible for the security of its own material.
- Each team is also responsible for breakdown of its team materials and clean-up of its exhibit area following the awards ceremony on Game Day.
- All material should be clearly marked with the appropriate identification and contact information.
- Refer to the ***2018 Awards and Judging – Hub Logistics*** document concerning when and where team exhibits can be set up at your local hub competition.
- Candy and other food and drink items are <u>not</u> permitted at exhibits as complimentary handouts. Refer to the ***2018 Awards and Judging – Hub Logistics*** document concerning specific rules for your local hub competition.
- During the designated interview time, at least one student representative from the team must be present who is able to respond to informal questions asked about the exhibit. In addition, student representatives should be aware that judges may ask questions concerning robot design and construction. These questions will be part of the interview evaluation of the team.
- Teams should expect to be visited by three to four different judges during this period.
- Judges may also interview team members in the pit area and in the seating area.

5.3.3 Exhibit and Interview Evaluation

- ***Exhibits*** (11 points) will be evaluated on:

  - Illustrate your team's outreach effort; include what audiences you reached, how you engaged them and what resources you used to do so.
    - Create visuals to share audience and outreach data
    - The exhibit should include real-world references to this year's game theme
    - Share the impact of your outreach; present data on your social media exposure
    - Create a cohesive exhibit with information arranged in a logical and creative manner

  - Create an exhibit that provides a Brand Experience
    - The exhibit should visually tell the story from product to program
    - The team's company/product Brand Promise should be evident and clear
    - It should be clear to visitors why your team/company is making the product (robot)
    - Include testimonials, documentation, and an interactive element
    - All sponsors should be recognized; materials should include the national BEST Robotics logo

  - Engineer and manufacture the exhibit using sustainable methodology and resources
    - Use as little energy as needed for technology, multi-media, or other electronic display elements
    - Be creative with the energy sources you use
    - Use recycled, up-cycled and repurposed items that reflect sustainability and corporate responsibility; the items should be cohesively integrated throughout the exhibit
    - Design reusable structures that reflect increased sustainability

- ***Interviews*** (9 points) will be evaluated on:

  - Communication Skills

    - Company Elevator speech – 30 second speech that serves as a 'commercial' for your company. It tells the interviewer who you are and what benefits your product delivers.

    - Include storytelling that shares the brand's promise and differentiating factors

    - Provide testimonials and report outreach efforts. Share a personal #Thanks2BESTrobotics story.

  - Student Knowledge

    - Clearly articulate an understanding of the game theme/problem

    - Explain the engineering process and how it provides a brand advantage; demonstrate detailed knowledge of the robot design and construction

    - Share evidence that students were the primary designers and builders of the robot; share unique lessons that your have learned while working on the team

5.4 Spirit and Sportsmanship (10 Points)

5.4.1 Spirit and Sportsmanship Guidelines

- Judges will evaluate this category on Game Day
- Judges will observe the spirit promoted by the team during their head-to-head competition matches as well as the team's conduct throughout the day in the seating area, team exhibit area, game floor, and pit area

5.4.2 Spirit and Sportsmanship Evaluation

- Spirit includes the vigor and enthusiasm displayed by team representatives
- Teams can use posters, props, t-shirts, cheerleaders, musicians, mascots, costumes, and lower-frequency noise-makers to increase the level of spirit (Check the ***2018 Awards and Judging – Hub Logistics*** document to determine noise-maker restrictions for your local hub competition)
- Community involvement: number of team supporters present at competition (other than students)
- Sportsmanship includes outward displays of sportsmanship (e.g., helping other teams in need), grace in winning and losing, and conduct and attitude considered befitting participation in sports
- Overall team sportsmanship is also demonstrated by students (not mentors) making the majority of robot adjustments and repairs during the competition

5.5 Robot Performance (15 Points)

- The *Robot Performance* component will determine the final 15% of possible BEST Award points. These 15 points will be based on the total game points earned throughout the seeding phase of the head-to-head competition (prior to the semi-final phase) according to the following scale:

• Team finishes in top 20% of all teams competing at hub	15 Points
• Team finishes in top 40% of all teams competing at hub	12 Points
• Team finishes in top 60% of all teams competing at hub	9 Points
• Team finishes in top 80% of all teams competing at hub	6 Points
• Team finishes in top 100% of all teams competing at hub	3 Points
• Team is unable to score any points during the competition	0 Points

- Up to 15 Robot Performance points will be added to the total BEST Award points

5.6 BEST Robotics Brand Usage Guidelines for Teams

Although the BEST Award doesn't require teams to design websites or tee shirts or maintain a certain level of presence on social media, students are encouraged to explore options and we support their

creativity. BEST Robotics also wants to ensure that our brand is presented in a clear and consistent manner across our footprint. Therefore, we ask students to follow these guidelines:

- Include the BEST Robotics national logo on all digital and printed materials.
- Team websites should include
    - On the homepage - the national logo and a link to national website
    - Storytelling from students (video or quote with pictures)
    - Testimonials from community leader (video or quote with pictures)
- Tee shirts should include the national logo, set apart from other sponsors or positioned above all other sponsors
- All social media posts during or about your team's outreach activities should include the hashtag: #BESTRobotics and tag @BESTRobotics in order to be counted as a metric

Section 6 Advancement to Regional Championship Competition

The total number of teams a hub will be allowed to send to a regional championship is determined by the regional championship. Traditionally this number is related to the number of teams competing at the hub, the total number of teams in the region, and the maximum number of teams that the regional championship venue can accommodate.

Advancing teams will be selected using the following priority order:

1. BEST Award 1st Place
2. Game 1st Place
3. BEST Award 2nd Place
4. Game 2nd Place
5. BEST Award 3rd Place
6. Game 3rd Place
7. BEST Award 4th Place
8. Game 4th Place
9. BEST Award 5th Place
10. BEST Award 6th Place
11. BEST Award 7th Place
12. etc…….

The list above is intended to illustrate the qualification order, not necessarily the exact number of teams advancing from each hub.

Exception to the qualification order:

A hub has the option to advance a Game winner OR a BEST Award winner at their discretion IF the hub is limited in the number of advancing teams that can participate in the BEST Award at the regional championship, and IF a BEST winner also places as a Game winner.

For example, if a regional championship allows four advancing teams per hub, BUT only two advancing teams can participate in the BEST Award, AND a Game winner is also a BEST Award winner at the hub level, a hub could be forced to advance a 3rd place BEST Award team that cannot actually compete in the BEST Award at the Regional level. In such a case, the hub can opt to send the 3rd place Game winner instead of the 3rd place BEST Award winner.

Section 7 Standard Required Awards

7.1 Hub-Level Awards

The following awards will be given at all BEST hub competitions:

BEST Award

Awarded to the team that best embodies the concept of ***Boosting Engineering, Science and Technology***. Winning the BEST Award is considered the highest achievement any team in the competition can accomplish. First, second, and third place finishes will be awarded.

Head-to-Head Competition Award

Awarded to the teams whose machines finish first, second, and third in the head-to-head robotics competition. In addition, fourth place "finalist" will also be awarded.

Founders Award for Creative Design

Awarded to the team that makes best use of the engineering process in consideration of offensive and defensive capabilities in machine design. Awarded in recognition of BEST founders Steve Marum and Ted Mahler.

Most Robust Machine

Awarded to the team whose machine requires the least maintenance during and between matches and is generally the sturdiest machine in the competition.

7.2 Regional Championship Awards

The following awards will be given at all BEST regional championships:

BEST Award

Awarded to the team that best embodies the concept of ***Boosting Engineering, Science and Technology***. Winning the BEST Award is considered the highest achievement any team in the competition can accomplish. First, second, and third place finishes will be awarded.

Head-to-Head Robotics Competition Award

Awarded to the teams whose machines finish first, second, and third in the head-to-head robotics competition. In addition, fourth place "finalist" will also be awarded.

Founders Award for Creative Design

Awarded to the team that makes best use of the engineering process in consideration of offensive and defensive capabilities in machine design; awarded in recognition of BEST founders Steve Marum and Ted Mahler.

Most Robust Machine

Awarded to the team whose machine requires the least maintenance during and between matches and is generally the sturdiest machine in the competition.

BEST Simulink Design Award

Awarded to one team in each of the 5 BEST regions (Denver, Frontier Trails, Pittsburgh, Souths, Texas) that best applies the 'Simulink Support Package for VEX' based on the specified judging criteria and their robot's performance in the competition.